Meridian 1
Succession 1000
Succession 1000M
Succession 3.0 Software

Telephones and Consoles

Description

Document Number: 553-3001-367
Document Release: Standard 1.00
Date: October 2003

Produced in Canada

Revision history

October 2003

Standard 1.00. This document is a new NTP for Succession 3.0. It was created to support a restructuring of the Documentation Library, which resulted in the merging of multiple legacy NTPs. This new document consolidates information previously contained in the following legacy documents, now retired:

- *Attendant Console Description (*553-2201-117)
- *Digital Telephones Line Engineering(*553-2201-180)
- *Meridian 1 Telephones (*553-3001-108)
- *Meridian 1 European Digital Telephones (*553-3001-114)
- *Telephone and Attendant Console Installation* (553-3001-215)
- *M3900 Series Meridian Digital Telephones (*553-3001-216)
- *Option 11C and 11C Mini Technical Reference Guide* (553-3011-100)

Content from *Option 11C and 11C Mini Technical Reference Guide* also appears in *Circuit Card: Description and Installation* (553-3001-211).

Contents

About this document

This document is a global document. Contact your system supplier or your Nortel Networks representative to verify that the hardware and software described are supported in your area.

Subject

This document provides technical information about Meridian analog, digital and modular telephone sets and attendant consoles. This information includes descriptions, features and specifications; installation and configuration procedures; operation; administration; software, wiring and power requirements; environmental and safety considerations; installing and using add-on modules, data options, and software. A section is also provided on engineering and configuring digital telephone lines.

This document does not provide information about the Succession i2002 and i2004 Internet Telephones or i2050 Software Phone. For information on Succession i2000 Series Internet Telephones, refer to *Internet Terminals: Description* (553-3001-368).

Note on legacy products and releases

This NTP contains information about systems, components, and features that are compatible with Succession 3.0 Software. For more information on legacy products and releases, click the **Technical Documentation** link under **Support** on the Nortel Networks home page:

http://www.nortelnetworks.com/

Applicable systems

This document applies to the following systems:

- Meridian 1 Option 11C Chassis
- Meridian 1 Option 11C Cabinet
- Meridian 1 Option 51C
- Meridian 1 Option 61
- Meridian 1 Option 61C
- Meridian 1 Option 61C CP PII
- Meridian 1 Option 81
- Meridian 1 Option 81C
- Meridian 1 Option 81C CP PII
- Succession 1000
- Succession 1000M Cabinet
- Succession 1000M Chassis
- Succession 1000M Half Group
- Succession 1000M Single Group
- Succession 1000M Multi Group

Note that memory upgrades may be required to run Succession 3.0 Software on CP3 or CP4 systems (Options 51C, 61, 61C, 81, 81C).

System migration

When particular Meridian 1 systems are upgraded to run Succession 3.0 Software and configured to include a Succession Signaling Server, they

become Succession 1000M systems. Table 1 lists each Meridian 1 system that supports an upgrade path to a Succession 1000M system.

Table 1
Meridian 1 systems to Succession 1000M systems

This Meridian 1 system...	Maps to this Succession 1000M system
Meridian 1 Option 11C Chassis	Succession 1000M Chassis
Meridian 1 Option 11C Cabinet	Succession 1000M Cabinet
Meridian 1 Option 51C	Succession 1000M Half Group
Meridian 1 Option 61	Succession 1000M Single Group
Meridian 1 Option 61C	Succession 1000M Single Group
Meridian 1 Option 61C CP PII	Succession 1000M Single Group
Meridian 1 Option 81	Succession 1000M Multi Group
Meridian 1 Option 81C	Succession 1000M Multi Group
Meridian 1 Option 81C CP PII	Succession 1000M Multi Group

Note the following:

- When an Option 11C system is upgraded to run Succession 3.0 Software, that system becomes a Meridian 1 Option 11C Cabinet.
- When an Option 11C Mini system is upgraded to run Succession 3.0 Software, that system becomes a Meridian 1 Option 11C Chassis.

For more information, see one or more of the following NTPs:

- *Small System: Upgrade Procedures* (553-3011-258)
- *Large System: Upgrade Procedures* (553-3021-258)
- *Succession 1000 System: Upgrade Procedures* (553-3031-258)

Intended audience

This document is intended for individuals responsible for installing, configuring, operating, administering, and troubleshooting Meridian digital telephones, attendant consoles and add-on modules, or for engineering and configuring digital telephone lines

Conventions

Terminology

In this document, the following systems are referred to generically as “system”:

- Meridian 1
- Succession 1000
- Succession 1000M

The following systems are referred to generically as “Small System”:

- Succession 1000M Chassis
- Succession 1000M Cabinet
- Meridian 1 Option 11C Chassis
- Meridian 1 Option 11C Cabinet

The following systems are referred to generically as “Large System”:

- Meridian 1 Option 51C
- Meridian 1 Option 61
- Meridian 1 Option 61C
- Meridian 1 Option 61C CP PII
- Meridian 1 Option 81
- Meridian 1 Option 81C
- Meridian 1 Option 81C CP PII
- Succession 1000M Half Group

- Succession 1000M Single Group
- Succession 1000M Multi Group

The call processor in Succession 1000 and Succession 1000M systems is referred to as the “Succession Call Server”.

Related information

This section lists information sources that relate to this document.

NTPs

The following NTPs are referenced in this document:

- *Meridian Communications Unit and Meridian Communications Adapter: Description, Installation, Administration, Operation* (553-2731-109)
- *Spares Planning* (553-3001-153)
- *Equipment Identification* (553-3001-154)
- *Circuit Card: Description and Installation* (553-3001-211)
- *Features and Services* (553-3001-306)
- *Software Input/Output: Administration* (553-3001-311)
- *Software Input/Output: System Messages* (553-3001-411)
- *Software Input/Output: Maintenance* (553-3001-511)
- *Small System: Upgrade Procedures* (553-3011-258)
- *Large System: Upgrade Procedures* (553-3021-258)
- *Meridian Digital Telephones: M2006, M2008/M2008HF, M2616 User Guide*
- *M2216ACD Telephone User Guide*
- *M2616CT Cordless Telephone User Guide*
- *Meridian Digital Telephones: M3901, M3902, M3903, M3904 User Guide*

- *Meridian Digital Telephones and Options: M2006, M2008/M2008HF, M2616, M2216ACD, M2016S Secure Set Quick Reference Guide*
- *M2317 Quick Reference Card*
- *Meridian Digital Telephones: M3902, M3903, M3904 Quick Reference Guide*)
- *Asynchronous Data User Guide*
- *Meridian Programmable Data Adapter User Guide*
- *Meridian Communications Adapter User Guide*
- *Installing the Analog Terminal Adapter*
- *Analog Terminal Adapter Quick Reference Card*
- *Meridian 1 Attendant PC: Software User Guide*

For information on Succession i2000 Series Internet Telephones, refer to *Internet Terminals: Description* (553-3001-368).

Online

To access Nortel Networks documentation online, click the **Technical Documentation** link under **Support** on the Nortel Networks home page:

http://www.nortelnetworks.com/

CD-ROM

To obtain Nortel Networks documentation on CD-ROM, contact your Nortel Networks customer representative.

Meridian Digital Telephones

Contents

This section contains information on the following topics:

Introduction

Meridian Digital Telephones are connected to the system through a 2-wire loop carrying two independent 64 kb/s PCM channels with associated signaling channels. One of the two PCM channels is dedicated to voice, while the other is dedicated to data traffic. Line cords and handset cords on all Meridian digital telephones are equipped with snap-in TELADAPT connectors for quick and easy connecting procedures.

The telephone interfaces with the Digital Line Card (DLC).

Functional description

This section describes the features and capabilities of Meridian Digital Telephones.

Volume control

Speaker volume (or piezo-disc transducer volume in digital telephones not equipped with a Handsfree unit) is controlled by one key with two toggle positions. Operating the “Volume Up” or “Volume Down” pad of the key

increases or decreases the volume for the tone or sound which is currently active.

Line engineering

Meridian Digital Telephones operate through twisted pair wiring. The maximum permissible loop length is 3500 ft. of 24AWG standard twisted wire with no bridge taps.

Local alerting tones

Four alerting tones and a buzz sound are provided. The alerting tone cadences cannot be changed from the telephone, but can be altered for individual Meridian Digital Telephones by software controlled adjustments in the system. Refer to *Software Input/Output: Administration* (553-3001-311) and *Software Input/Output: Maintenance* (553-3001-511) for more information. All other tones such as dial tone or overflow tones, are provided by the system from a Tone and Digit Switch.

Alerting tone characteristics

The tone frequency combinations are as follows:

Tone	Frequencies	Warble rate (Hz)
1	(667 Hz, 500 Hz)	10.4
2	(667 Hz, 500 Hz)	2.6
3	(333 Hz, 250 Hz)	10.4
4	(333 Hz, 250 Hz)	2.6

Note: A 500 Hz buzz signal is provided for incoming call notification while the receiver is off-hook.

Power requirements

Both the M2009 telephone and M2018 telephone are loop powered. Loop power uses +15 V and -15 V sources, and assumes 3500 feet maximum loop length of 24 AWG wire and a minimum of 13.5 V at the telephone terminals.

The Handsfree unit, which is integrated in the Meridian M2112, requires an auxiliary power supply. Power can be obtained from either a QUT1 25 V AC closet power supply or a local plug-in transformer (AO273077) over a separate pair of wires.

If the power supply fails, Handsfree will not operate, but all other features will continue to function, provided the power failure does not affect the system. The loop-powered functions of all Meridian digital telephones remain operational only if the system is equipped with a backup battery.

Additional power is obtained over a separate pair of wires. Maximum Handsfree current is 110 mA with a minimum of 16 V AC to be present at the telephone terminal. The following rules apply:

- For the QUT1 closet power supply: (compatible with SL-1 sets only)
  - The power supply loop for the Handsfree unit should follow the same rules as the loop power requirements, that is, the maximum allowable loop length and wire gauge are 3500 ft. of 24 AWG wire.
  - Each M2112 Handsfree must be powered by one tap of one winding, however, it is permissible to connect two (2) 12.5 V AC windings in series to provide 25 V AC power for Handsfree.
- For the local plug-in transformer:
  - A single winding transformer equipped with a 3 m (10 ft.) cord of 22 AWG two-conductor stranded and twisted wire with a modular duplex adapter (NE-267QA) at the end is required.
  - The following minimum specifications have to be met by this transformer:

    — No load output voltage: 21 V AC max.

    — Voltage at rated current: 16 V AC ±10%

    — Rated load current: 375 mA

Asynchronous Data Option (ADO)

For more information on the Asynchronous Data Option, see “M2000 data options” on page 193.

Data

If the Asynchronous Data Option (ADO) is installed, an external power supply is needed in addition to the power from the line (see Table). A 110 V AC 60 Hz, 100 V AC 50/60 Hz or a 220 V AC 50 Hz multi-output power supply unit provides nominal voltages of +5 V, +12 V and -12 V DC. The power supply connects to the back of the telephone through a 5-pin Molex power connector.

Discrimination

If the AC power supply fails, data calls cannot be processed. All external power supplies are equipped with short circuit and thermal shutdown protection.

Table 2 lists available units.

Table 2
External power supply for Meridian Digital Telephones ADO

North American version	
NPS50220-03L5	Multi-output external power supply
	(CPC-# A0336823), UL listed and CSA approved.
Input:	57-63 Hz 115-132 V AC
Output:	+5 V DC, 1.0 A (pin 3 for supply, pin 2 for return)
	+12 V DC, 200 mA (pin 6 for supply, pin 1 for return)
	-12 V DC, 200 mA (pin 4 for supply, pin 1 for return)
Japanese version	
NPS50220-03L8	Multi-output external power supply
	(CPC-# A0336891), Japan Standard (“T” Mark).
Input:	47-63 Hz 85-115 V AC
Output:	+5 V DC, 1.0 A (pin 3 for supply, pin 2 for return)
	+12 V DC, 200 mA (pin 6 for supply, pin 1 for return)
	-12 V DC, 200 mA (pin 4 for supply, pin 1 for return)
European version	
NPS50220-03L5	Multi-output external power supply
	(CPC-# A0336166), conforming to NPS50561 general requirements and UL1012.
Input:	57-53 Hz 200-240 V AC
Output:	+5 V DC, 1.0 A (pin 3 for supply, pin 2 for return)
	+12 V DC, 200 mA (pin 6 for supply, pin 1 for return)
	-12 V DC, 200 mA (pin 4 for supply, pin 1 for return)

Data characteristics

The Asynchronous Data Option (ADO) communicates with the data terminal equipment having characteristics as shown in Table 3.

Table 3
Meridian Digital Telephone ADO characteristics

Data type	ASCII
Synchronization **External power supply for Meridian Digital Telephones ADO**	Asynchronous, Start-Stop
Number of Bits	8 bits
Parity	none (unchecked)
Data rate	300, 1200, 2400, 4800, 9600, 19200 bits per second (autobaud)
Stop bits	2 bits for 110 bits per second; 1 bit for all other speeds
Transmission	Full duplex

Voice and Voice Signaling Channel

The Digital telephone Interface Chip functions as a control to switch the handset, speaker, keyboard scanning, and LCD controls on and off.

Data and Data Signaling Channel

The ADO supports asynchronous ASCII operation. A data byte is received from your terminal or personal computer, a control byte is added, and the two bytes are transferred to the associated line card. In the other direction, two data bytes are received from the line card, and the data byte is delivered to your terminal in a bit serial format, at the terminal's bit rate.

The Meridian Digital ADO (equipped with the RS-232-C EIA interface) supports the following features for ASCII, asynchronous, character mode, interactive data terminals:

- HAYES dialing
- Keyboard dialing (KBD) - all transmission speeds supported
- Call origination to local and remote hosts
- Call termination
- Ring Again Capability
- Auto Dial
- Speed Call
- Automatic or Manual answering of incoming data calls
- Manual Modem pooling
- Remote loopback

Details for accessing and operating the various features are given in the *Asynchronous Data User Guide*.

Meridian modular telephones

Contents

This section contains information on the following topics:

Introduction

The Meridian Modular Telephones are designed to provide cost effective integrated voice and data communication capability. They interface with the Digital Line Card (DLC). No additional hardware is required at the line circuit to provide data communication.

Meridian Modular Telephones are connected to the system through a two-wire loop carrying two independent 64 Kb/s PCM Channels with associated signaling channels. One of the two PCM channels is dedicated to voice while the other is dedicated to data traffic. Line cords and handset cords on all Meridian Digital Telephones are equipped with snap-in TELADAPT connectors for easy and quick connecting procedures.

Software requirements

The option number for the Meridian Modular Telephones is 170. The mnemonic is ARIE. The DSET package (88) and the TSET package (89) are required.

Peripheral equipment requirements

The telephone interfaces with the Digital Line Card (DLC). The digital line card supports eight Integrated Voice and Data ports; each port supports one data and one voice channel. A voice TN and a data TN are assigned in the software.

General description

This section describes the various features and capabilities of the following Meridian Modular Telephones.

M2006 — A single line telephone with 6 programmable function keys. See Figure 1 on page 27.

M2008 — A multi-line telephone with 8 programmable function keys. See Figure 2 on page 28.

M2616 — A high performance multi-line telephone with 16 programmable function keys and integrated Handsfree unit. See Figure 3 on page 29.

M2016S — A Telephone Security Group Class II approved telephone designed to provide on-hook security. It is similar to the M2616, with 16 programmable function keys, but has no handsfree capability. See Figure 3 on page 29.

M2216ACD-1 — A multi-line telephone for ACD operations. It has 15 programmable function keys, a special ACD Display Module and two RJ-32 jacks for modular electret headsets. See Figure 5 on page 38.

M2216ACD-2 — A multi-line telephone for ACD operations. It has 15 programmable function keys, and a special ACD Display. It is similar to

model 1, but with one PJ-327 jack for a carbon agent headset and one RJ-32 jack for an electret supervisor headset. See Figure 5 on page 38.

Figure 1
M2006 modular telephone

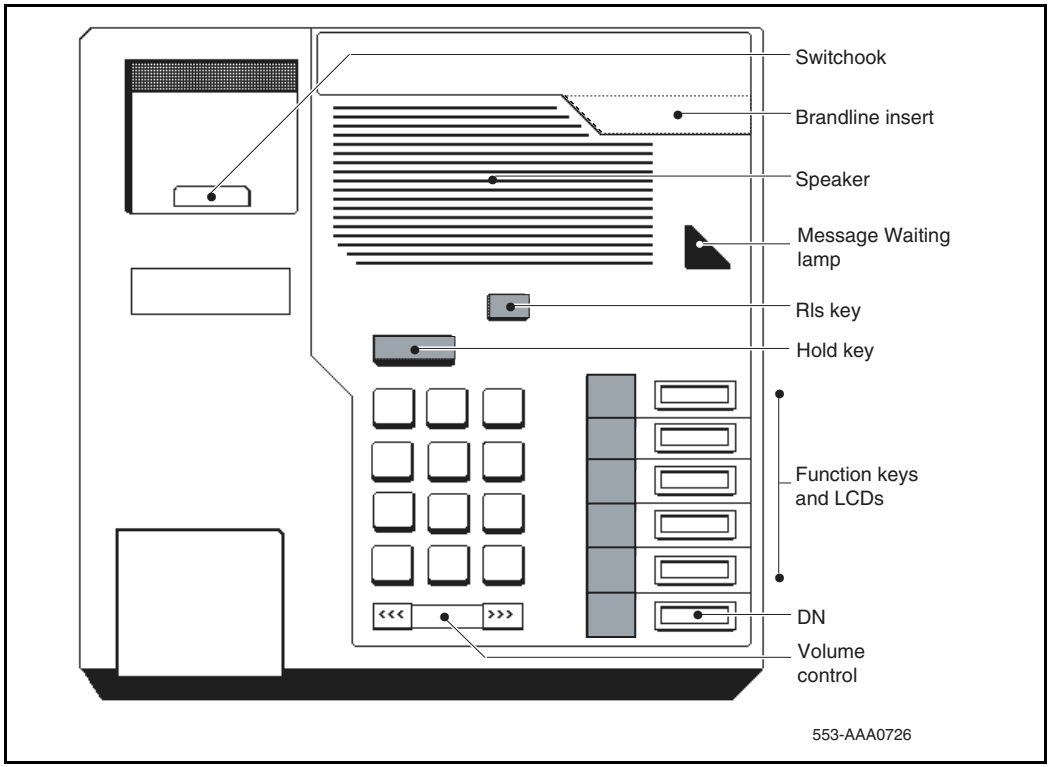

Dimensions:

Length: 8.42 in. (215 mm.)

Width: 8.42 in. (215 mm.)

Height: 3.61 in. (93mm.)

Weight: approximately 2 lbs. (1 kg.)

Figure 2
M2008 modular telephone

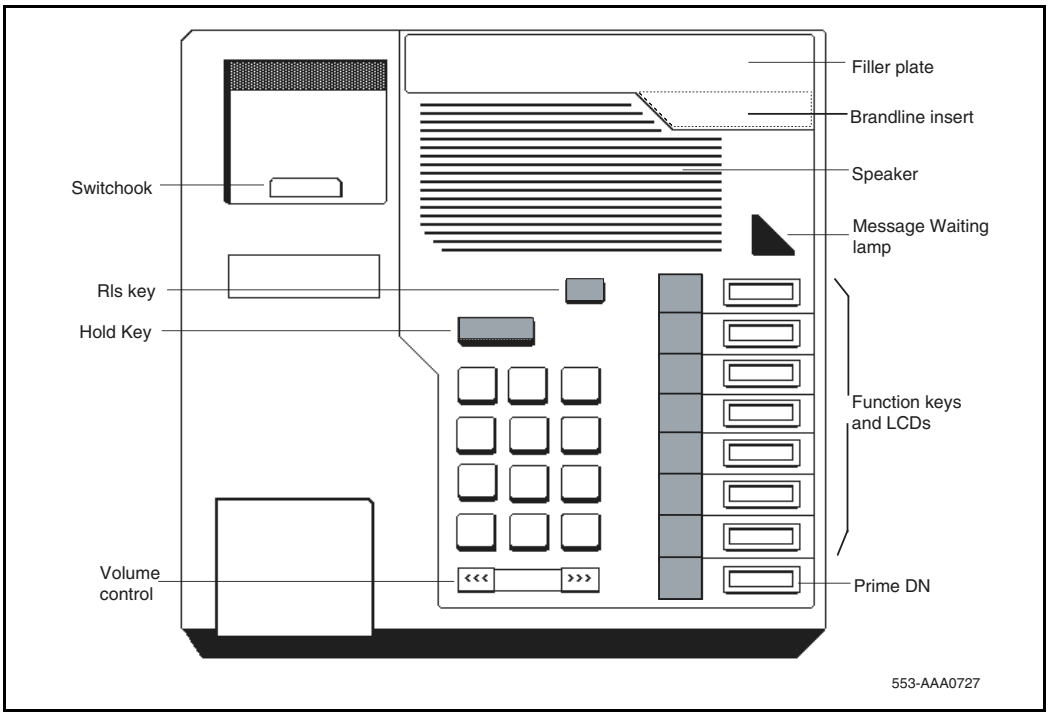

Dimensions:

Length: 8.42 in. (215 mm.)

Width: 8.42 in. (215 mm.)

Height: 3.61 in. (93 mm.)

Weight: approximately 2 lbs. (1 kg.)

Figure 3
M2016S and M2616 modular telephones

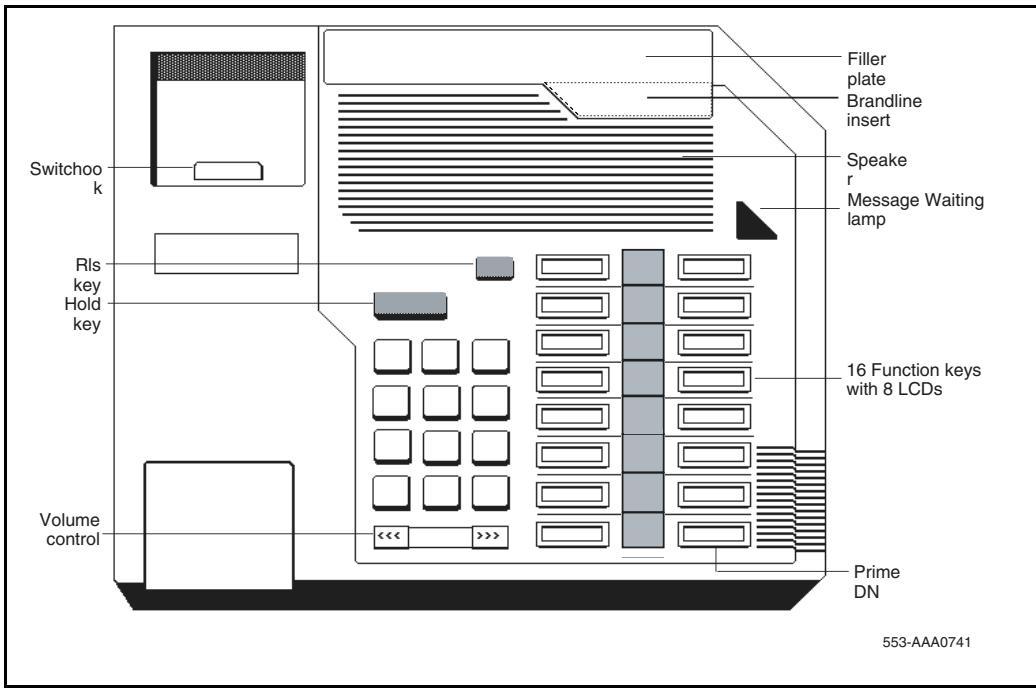

Dimensions:

Length: 9.75 in. (250 mm.)

Width: 9.45 in. (235 mm.)

Height: 3.64 in. (93 mm.)

Weight: approximately 2 lbs. (1 kg.)

Figure 4
M2216ACD-1 and -2 modular telephones

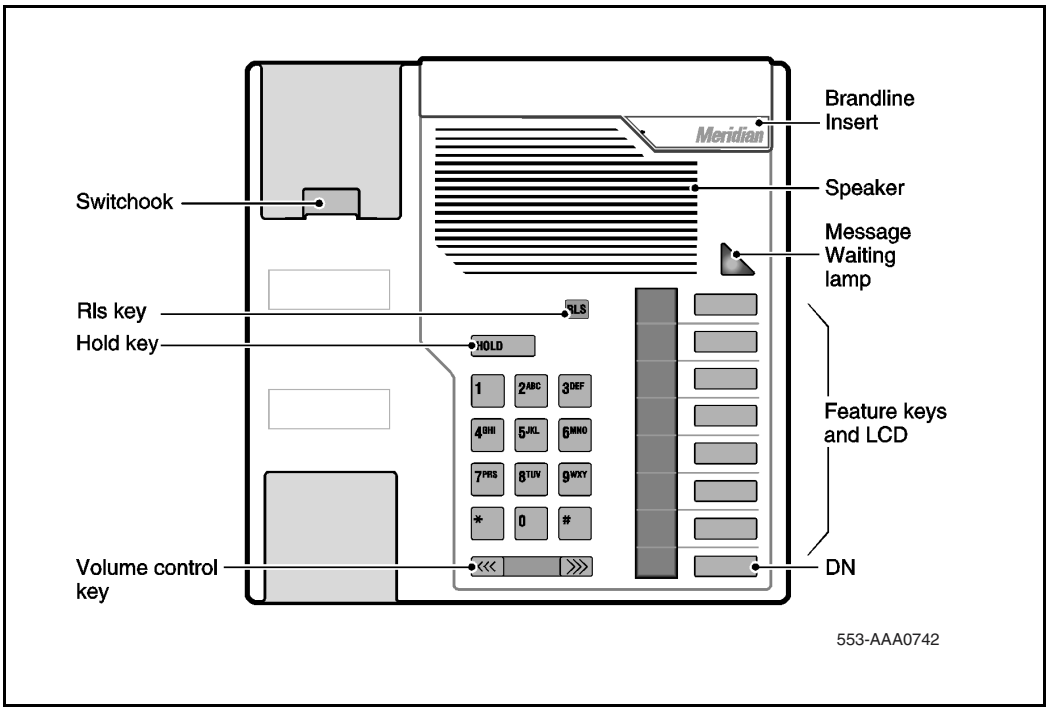

Dimensions:

Length: 9.75 in. (250 mm.)

Width: 9.45 in. (235 mm.)

Height: 3.64 in. (93 mm.)

Weight: approximately 2 lbs. (1 kg.)

Physical description

All of the Meridian Modular Telephones are equipped with:

- Hold key
- Release key
- Volume control
- Message Waiting lamp
- Speaker

Each modular telephone also has a number of programmable keys with LCD indicators that can be assigned to any combination of directory numbers and features (only one DN for the M2006). The lower right-hand key (key 0) is reserved for the Primary DN.

When equipped with a Display module or MCA, key 07 is automatically assigned as the Program key and cannot be changed. Key 05 becomes the Program key on the M2006, if equipped with MCA.

The M2006 is a single line telephone and accepts only one DN. The remaining five key/lamp pairs can be assigned any feature that is not considered a DN, such as Transfer, Call Forward, or Conference. Features that cannot be assigned are those that are considered DNs: Voice Call and 2-way Hotline, for example. Attempting to assign more than one DN to the M2006 causes the telephone to disables itself and all LCDs light steadily. It will return to its normal operating state when service change removes all secondary DNs.

LCD indicators support 4 key/LCD states:

Function	**LCD state**
idle	off
active	on (steady)
ringing	flash (60 Hz)
hold	fast flash (120 Hz)

* An indicator fast flashes when a feature key is pressed but the procedure necessary to activate the feature has not been completed.

Volume control

One key with two toggle positions controls volume. Pressing the right “volume up” or left “volume down” side of the key incrementally increases or decreases the volume for the tone or sound which is currently active. The volume settings are retained for subsequent calls until new volume adjustments are made. If the telephone is equipped with a Display Module, volume can be adjusted at any time with the setting displayed on the screen (in Program mode).

Handset volumes can be configured to return to nominal on a per call basis.

You can adjust the volume of the following tones, while they are audible:

- ringing
- handsfree (M2616)
- handset/headset
- buzz
- on-hook dialing

When the telephone is disconnected, all volume levels will return to default values upon reconnection.

When the telephone is operating on loop power alone, the highest (eighth) step in volume cannot be reached (as seen when using Display in Program mode).

Message Waiting lamp

Each Meridian Modular Telephone has a red triangle in the upper right-hand corner that lights brightly to indicate a message is waiting. This LED is the primary message waiting indicator and lets you know a message is waiting regardless of whether the telephone has a message waiting key/lamp pair. You must have Message Waiting CCOS configured.

If you do assign a message waiting key/lamp pair, there will be two indications of a message waiting:

- the red Message Waiting triangle lights, and
- the LCD associated with the Message Waiting key flashes.

You may assign an Autodial key that dials the message center (or voice mail system) to avoid the double indication, or have no key/lamp pair assigned to the message center.

The Message Waiting lamp is also used to indicate security of the M2016S. The red LED triangle lights steadily when the phone is not secure (handset is off-hook, phone is ringing or any time the handset/piezo relays are connected). The red LED triangle blinks when a message is waiting.

Handsfree (M2616 only)

Handsfree (if software assigned), allows the user to talk to another party without lifting the handset. Activate Handsfree by depressing the Handsfree/mute key (key 15, top left) or by selecting a DN without lifting the handset. Once Handsfree is activated, it can be deactivated by picking up the handset or by ending the call using the Release (Rls) key. If Handsfree is not software assigned, you can assign any other feature to key 15.

When the Handsfree/mute key is pressed during a Handsfree call, the microphone is deactivated while the speaker remains active, preventing the other party from overhearing local conversations. The Handsfree LCD indicator flashes while the microphone is muted. Pressing the Handsfree/mute key again reactivates the microphone and the Handsfree LCD lights steadily.

Features and options matrix

Table 4 lists the distinctive characteristics of each Meridian Modular Telephone and shows the optional hardware that you can add to each.

Table 4
Hardware features and options

	M2006	M2008	M2016S	M2616	M2216ACD-1	M2216ACD-2
Programmable keys	6	8	16	16	16	16
Handsfree microphone				stan-dard		
Optional hardware available:						
Display		x	x	x	standard	standard
Key Expansion Module			x	x	x	x
Programmable Data Adapter	x	x	x	x	x	x
External alerter interface	x	x		x	x	x
Brandline insert	x	x	x	x	x	x
Note: In this table, x indicates available features for the set type listed along the top row.						

Note: If the set is equipped with a Display or Meridian Programmable Data Adapter, the number of programmable keys is reduced by one, as key 07 (key 05 on M2006) automatically becomes the Program key.

Optional equipment

The modular design of the digital telephones described in this document makes adding hardware options easy (see Figure 6 on page 39). Below is a list of hardware you can add to Meridian Modular Telephones.

Display Module

A 2-line by 24-character Display Module provides system prompts, feedback on active features and valuable calling party information. In addition, you can modify various set features such as volume and screen contrast using the Program key (top right function key). You can enable a Call Timer which times calls made or received on the prime DN.

The Display Module requires a Power Supply Board on M2008.

There are two types of Display Module available:

- North American Display — Supports normal business features in two languages, English and Quebec French.
- Special Applications Display — Supports the following features:
  - Automatic Call Distribution (ACD)
  - Hospitality
  - 6 languages (English, Quebec French, Parisian French, German, Spanish, Dutch)

A Special Applications Display Module comes as standard equipment on the M2216ACD telephones. M2008 or M2616 telephones used as ACD telephones require the Special Applications Display.

> ***Note:*** It is possible to adjust the Display screen contrast so that it is too light or too dark to read. If you cannot read the Display, disconnect and then reconnect the line cord to return to the default settings.

Meridian Programmable Data Adapter

The Meridian Programmable Data Adapter (MPDA) mounts within the telephone (see Figure 7 on page 40) and allows asynchronous ASCII terminals, personal computers and printers to be connected to the telephone

using an RS-232-D (subminiature) interface. The MPDA has multilingual capability.
It requires additional power. See “Power requirements” on page 43.

For more information, see “Meridian Programmable Data Adapter” on page 50

Program key

The Program key is automatically assigned to Meridian Modular Telephones with Display or MPDA added. It allows you to change a variety of display features such as screen format, contrast and language. It also lets you change data parameters such as transmission speed and parity.

The upper right-hand key (key 05 on M2006, key 07 on all others) automatically becomes the Program key when Display or MPDA is configured with the telephone. The Program key is local to the set and shows blank when you print key assignments in LD 20.

External Alerter Interface

The External Alerter Board provides an interface to standard remote ringing devices, such as a ringing unit installed in a location separate from the telephone. The External Alerter Interface is not the remote ringer itself, but provides access to standard, off-the-shelf remote ringing devices. The Alerter Board requires additional power (see “Power requirements” on page 43).

You can program the External Alerter Interface to activate a ringer (or light) when the telephone rings or when the telephone is in use (off-hook).

Key Expansion Module

A modular 22 key unit can be attached to any 16 key Meridian Modular Telephone. The extra keys can be assigned to any combination of lines and features. You can add up to two expansion modules to a single telephone. You will need a separate footstand for the module(s), one for a single module, one for a double (see “Ordering information”). The expansion module requires additional power (see “Power requirements”).

The Key Expansion Module connects to the telephone through a ribbon cable running from the base of the telephone. It is physically connected to the telephone by the footstand.

Brandline Insert

The filler plate on the telephone or Display Module contains a removable insert designed to accommodate custom labeling. You can order blank Brandline Inserts and have a printer silk screen your company logo on them. Brandline Inserts snap easily into and out of the filler plate.

Headset

The M2216ACD telephones are compatible with three electret headsets:

- Plantronics Polaris
- GN Netcom Profile
- NT Liberation

The M2216ACD-2 agent jack is compatible with any standard carbon headset.

The headset interface of the M2216ACD-1 is adjustable to allow you to tune the electrical characteristics to optimize performance, while the M2216ACD-2 headset interface is fixed.

Any recording device connected to the receive path of a Meridian Modular Telephone must meet these requirements:

- load impedance at least 8K ohms across the audio band
- connect in parallel across pins 3 and 4 of the handset/headset jack
- isolate power source from the headset/handset jack

M2006/M2008/M2616 You can use an electret headset in the handset port of the M2006, M2008 or M2616 telephone. Choose an amplified headset that draws power from a battery or AC transformer (power is not provided by the telephone). The amplifier must draw less than 400 micro amps from the telephone jack.

Figure 5
M2216ACD-1 and -2 left side showing headset jacks

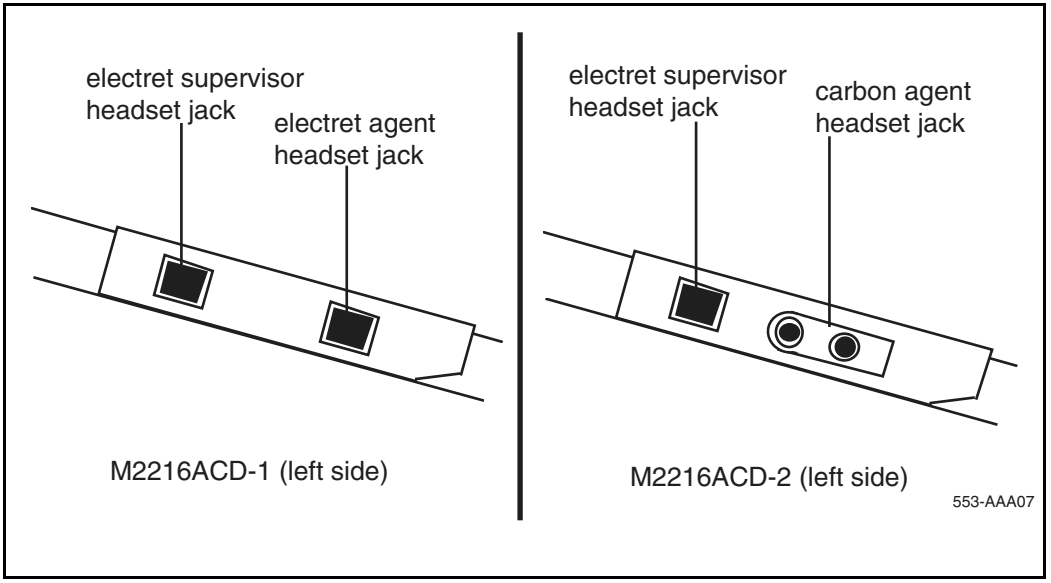

The headset should be designed to work with a telephone jack with these characteristics:

Transmit interface: +5 V through 10K DC bias resistance with maximum current of 500 micro amps. The differential input impedance is 10K ohms. Connects to pins 2 and 5 of the handset jack.

Receive interface: single ended output with output impedance of 180 ohms. Connects to pins 3 and 4 of the handset jack.

Figure 6
M2616 with Display Module and Key Expansion Module

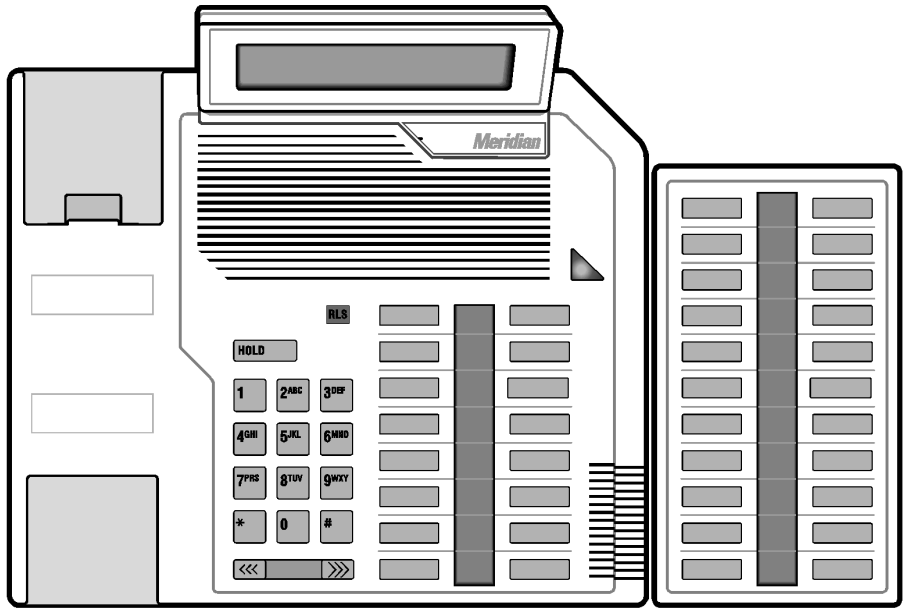

Figure 7
Back of telephone showing Meridian Programmable Data Adapter

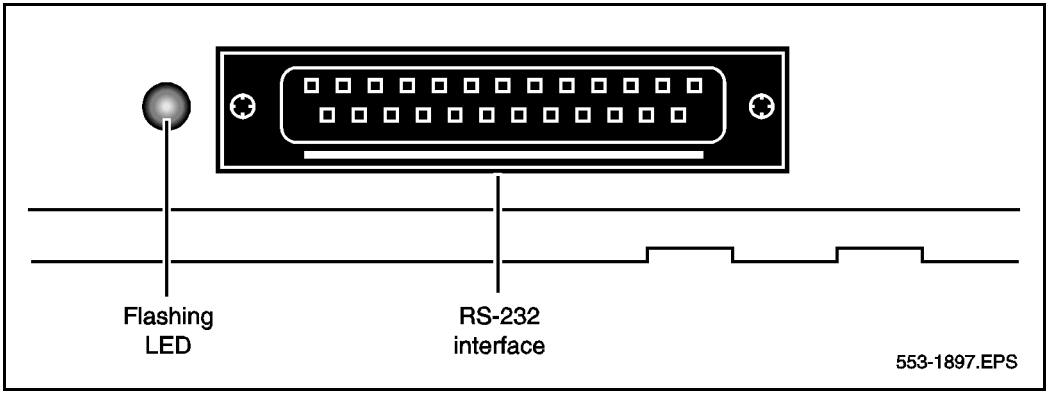

Specifications

The following specifications govern the performance of the Meridian Modular Telephones under the environmental conditions described.

Environmental and safety considerations

All digital telephones and their associated options meet the requirements of Electronic Industries Association (EIA) specification PN-1361.

Temperature and humidity

Operating state:

Temperature range	0° to 50° C (32° to 104° F)
Relative humidity	5% to 95% (non-condensing). At temperatures above 34°C (93°F) relative humidity is limited to 53 mbar of water vapor pressure.

Storage:

Temperature range	-50° to 70° C (-58° to 158° F)
Relative humidity	5% to 95% (non-condensing). At temperatures above 34°C (93°F) relative humidity is limited to 53 mbar of water vapor pressure.

Electromagnetic interference

The radiated and conducted electromagnetic interference meets the requirements of Subpart J of Part 15 of the FCC rules for class A computing devices.

Line engineering

The maximum permissible loop length is 3500 ft. (915 m), assuming 24 AWG (0.5 mm) standard twisted wire with no bridge taps. A 15.5 dB loss at 256 KHz defines the loop length limit (longer lengths are possible, depending on the wire's gauge and insulation).

The Meridian Modular Telephones use a 6 conductor line cord (A0346862).

> ***Note:*** Use only the line cord provided with the Meridian Modular Telephone. Using a cord designed for other digital telephones could result in damage to the cord.

Figure 8 shows a simplified block diagram of the Meridian Modular Telephone, MPDA and DLC.

Figure 8
Block diagram of MPDA and Meridian Modular Telephone

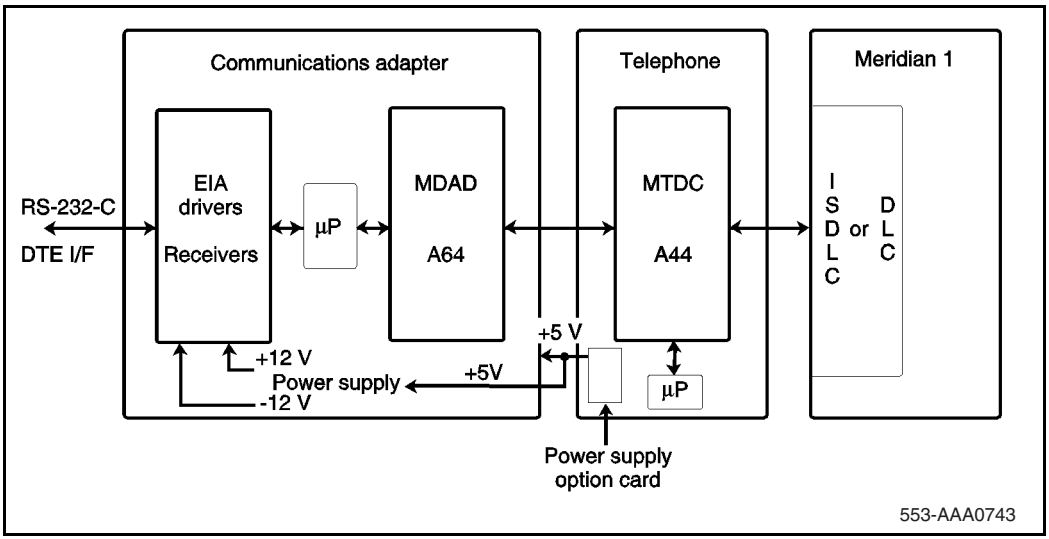

Local alerting tones

Each telephone provides four alerting tones and a buzz sound. The system controls the ringing cadence by sending tone-ON and tone-OFF messages to

the telephone. The alerting tone cadences cannot be changed from the telephone, but can be altered for individual Meridian Modular Telephones by software controlled adjustments.

Alerting tone characteristics

The tone frequency combinations are:

Tone	Frequencies	Warble Rate (Hz)
1	667 Hz, 500 Hz	10.4
2	667 Hz, 500 Hz	2.6

M2006/M2008:

3	1600 Hz, 2000 Hz	10.4
4	1600 Hz, 2000 Hz	2.6

M2016S/M2616/M2216ACD:

3	333 Hz, 250 H	10.4
4	333 Hz, 250 Hz	2.6

A 500 Hz buzz signal is provided for incoming call notification while the receiver is off-hook.

Power requirements

The M2006, M2008, M2616 (basic configuration and with Display Module) and M2216ACD-1 are loop powered. Loop power consists of a -30 V AC power source and assumes a 3500 ft. (915 m) maximum loop length of 24 AWG wire and a minimum 15.5 V AC at the telephone terminals.

> ***Note:*** The loop length limit is defined by a 15.5 dB loss at 256 KHz. Longer lengths can be determined using the wire's gauge and insulation.

The Handsfree feature, which is integrated into the M2616, requires no additional power.

Some configurations of telephones and options need more than basic loop power to operate. Table 5 lists the Meridian Modular Telephones and shows when additional power is needed to operate the telephone or its optional hardware. Power Supply Boards come installed in factory-assembled configurations which require additional power.

If a power failure occurs, configurations that require loop power will only continue to work if the system has battery backup. Only those options which require additional power will cease to function.

During a power failure, the carbon agent headset on the M2216ACD-2 will fail and the electret supervisor's jack can be used as an agent jack. If no headset was plugged in to the electret jack at this time, the call is dropped, the agent logged off and must log in again once the electret headset is plugged in. When power is restored, the carbon jack returns automatically.

Table 5
Power requirements

Telephone type	Loop power	Additional power (Power Supply Board)
M2006	Basic configuration	Any option(s)
M2008	Basic configuration	Any option(s)
M2016S	No	All configurations
M2616	Basic configuration (with Handsfree) and Display	Programmable Data Adapter Key Expansion Module External alerter interface
M2216ACD-1	Basic configuration (with Display)	Any option(s)
M2216ACD-2	No	All configurations

Power Supply Board

The power supply option consists of a Power Supply Board which mounts inside the telephone, coupled with an external wall-mount transformer or closet power supply which provides power to the Power Supply Board. The Power Supply Board receives its power through pins 1 and 6 of the line cord.

The Power Supply Board connects to the telephone through a 14 pin bottom entry connector.

The Power Supply Board comes factory installed with any configuration of the M2016S and M2216ACD-2. The M2006 and M2008 require the Power Supply Board with the addition of any option. The M2616 requires the Power Supply Board with any option except the Display Module.

Local plug-in transformer

A single winding transformer equipped with a 10 ft. (3 m) cord of 22 AWG two-conductor stranded and twisted wire with a modular RJ-11 duplex adapter (refer to Figure 9 on page 47) can provide the additional power needed to operate the telephone and its options.

WARNING

Do not plug any equipment (computer, modem, LAN card) other than the Meridian Modular Telephone into the RJ-11 transformer adapter, as damage to equipment may result.

120 V transformer (AO367335 or equivalent). The following minimum specifications must be met by this transformer:

Input voltage: 120 V AC / 60 Hz

No load output voltage: 29 V AC maximum

Voltage at rated current: 26.7 V AC minimum

Rated load current: 700 mA

240 V transformer (AO367914 or equivalent). The following minimum specifications have to be met by this transformer:

Input voltage: 240 V AC / 50 Hz

No load output voltage: 29 V AC maximum

Voltage at rated current: 26.7 V AC minimum

Rated load current: 700 mA

> ***Note:*** You cannot wall mount the telephone over the wall jack when using a transformer, due to the size of the RJ-11 adapter. Hang it above or to the side of the jack and run the line and power cords to it.

Closet power supply

Closet power can be obtained from an AC transformer for loops of 100 ft. (30 m) or less, or a DC transformer for loop lengths of 650 ft. (197 m) or less.

Figure 9
Configuration of local plug-in transformer

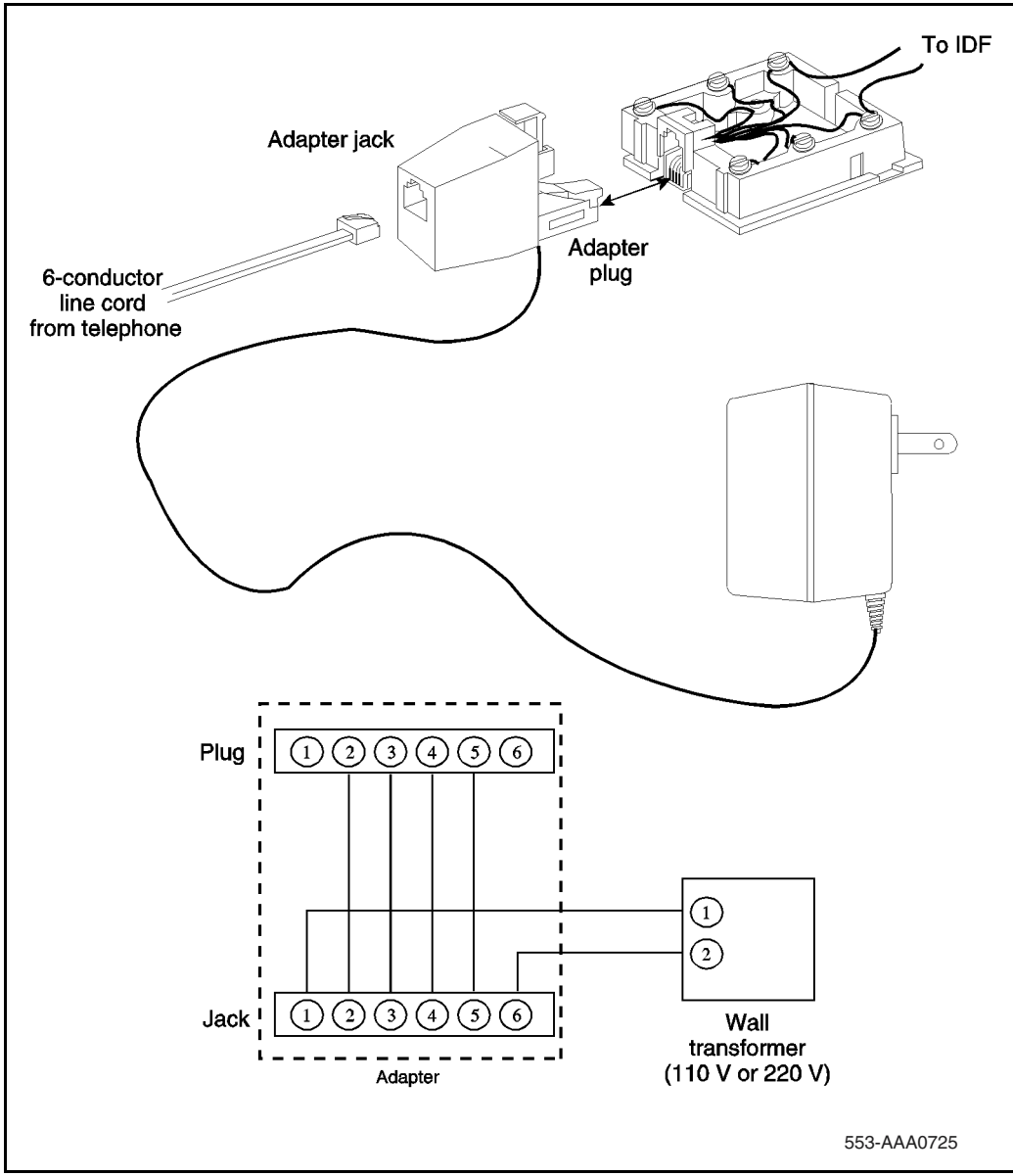

An equivalent power source can be used but must maintain isolation of outputs to the terminal. Refer to Figure 10 on page 49.

WARNING

When using closet power, do not plug the TELADAPT connector into any equipment (computer, modem, LAN card) other than the Meridian Modular Telephone, as damage to equipment may result.

All terminals must be isolated from the input winding and each terminal must be isolated from all other terminal windings. A separate winding is required for each terminal, and grounds should not be connected.

> ***Note:*** The QUT1 closet power supply source is not compatible with Meridian Modular Telephones.

The AC source should be rated at 29 V AC, 700 mA isolated. The DC source should be rated at 42 V DC, 300 mA isolated, with current limiting output of 1 amp.

Figure 10
Closet power supply configuration

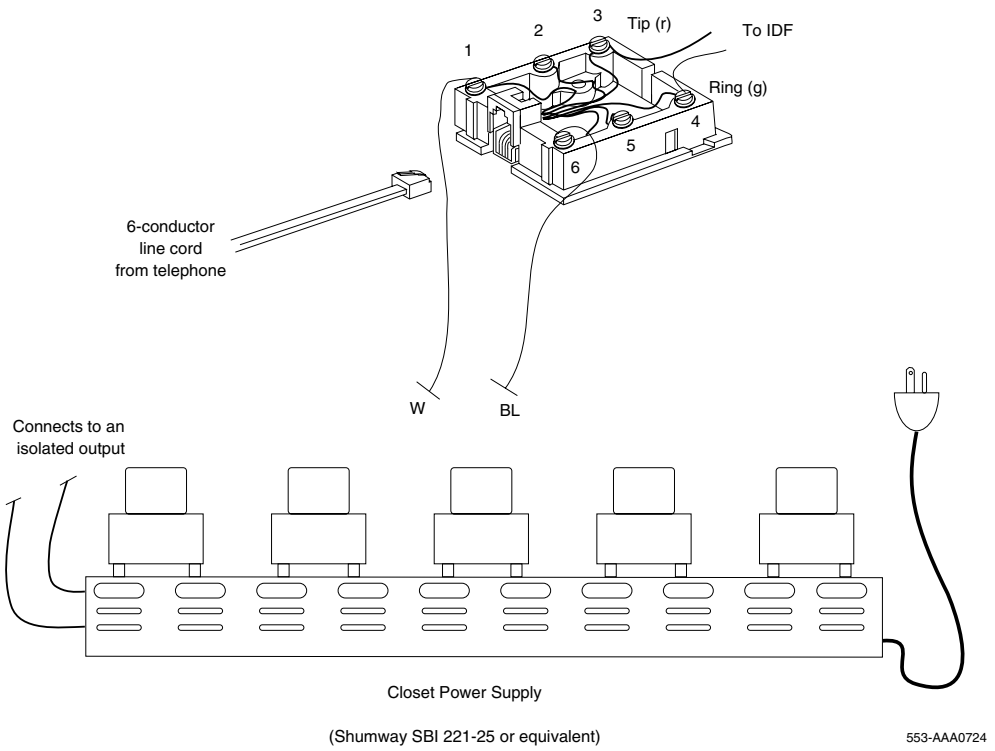

Meridian Programmable Data Adapter

When a Meridian Modular Telephone is equipped with the Meridian Programmable Data Adapter (MPDA), you can make a data call using keyboard dialing from your attached terminal. You can carry on voice and data communication simultaneously without causing any mutual interference.

The MPDA communicates with Data Terminal Equipment (DTE) having characteristics as shown in Table 6:

Table 6
MPDA data characteristics

Data type	ASCII
Synchronization	Asynchronous, Start-Stop
Number of Bits	8 bits
Parity	none (unchecked)
Data rate	110, 150, 300, 1200, 2400, 4800, 9600, 19200 bits per second (autobaud)
Stop bits	2 bits for 110 bits per second; 1 bit for all other speeds
Transmission	Full duplex

Note: The MPDA configuration of data parameters is stored locally (although you can set the configuration in the Succession 1000M Cabinet and Meridian 1 Option 11C Cabinet system). You cannot set the data parameters in the system before installing the MPDA in the telephone (the configuration information will be lost).

The keyboard dialing routine may vary with the data equipment being used and reference to the user's data terminal manual may be necessary. For more detailed information, see *Meridian Communications Unit User Guide and Meridian Communications Adapter Reference Guide*.

The MPDA can establish either data calls or voice calls. You can make data calls using keyboard dialing, keypad dialing or the AT command dialing feature. The AT dialing features lets you originate data calls to local and

remote Data Terminal Equipment (DTE) directly from a data terminal keyboard or personal computer. You can make voice calls using AT dialing from your terminal.

Users of personal computers already equipped with a Hayes Smartmodem or users who have a stand-alone Hayes Smartmodem can substitute the MPDA for data integration. The Hayes dialing feature, when used with third party communication software and the digital telephone, will support most of the Hayes Smartmodem features. Third party terminal emulation packages can also be used with Hayes dialing.

Features supported by the MPDA include:

- enhanced Hayes commands, including upper- and lower case dialing, voice call origination through AT dialing, hang up data call, and on-line disconnect of voice call
- script file capabilities allow you to program multiple data resources for automatic resource access
- Voice Call Origination (VCO)

Telephone installation

Contents

This section contains information on the following topics:

Packing and unpacking

Use proper care when unpacking any digital telephone. Check for damaged containers so that appropriate claims can be made to the transport company for items damaged in transit.

If a telephone must be returned to the factory, pack it in the appropriate container to avoid damage during transit. Remember to include all loose parts (cords, handset, power unit, labels, and lenses) in the shipment.

Installation and removal of analog (500/2500-type) telephones

Follow the steps in Procedure 1 to install an analog (500/2500-type) telephone.

> ***Note:*** Do not remove the circuit card if any remaining units on the card are assigned.

Procedure 1
Installing an analog (500/2500-type) telephone

1. Ensure that the wiring is installed at the telephone's location.
2. Unpack and inspect the telephone for damage. Assemble the handset and line cords if necessary.
3. Install the required designations on the telephone.
4. Connect the telephone to the TELADAPT connector.
5. Cross-connect the telephone wiring at the cross-connect terminal.
6. Configure the telephone in the system. Refer to the *Software Input/ Output: Administration* (553-3001-311).

End of Procedure

Follow the steps in Procedure 2 on page 54 to remove an analog (500/ 2500-type) telephone.

Procedure 2
Removing an analog (500/2500-type) telephone

1. Remove telephone data from the system. Refer to the *Software Input/ Output: Administration* (553-3001-311).
2. Disconnect the telephone from the TELADAPT connector.
3. Pack the telephone in a container.
4. If necessary, remove the cross-connections for the telephone at the cross-connect terminal.

5 Remove the line circuit card if required. Refer to *Circuit Card: Description and Installation* (553-3001-211).

End of Procedure

Installation and removal of M2000 Series Meridian Digital Telephones

Follow the steps in Procedure 3 to install the M2000 Series Meridian Digital Telephones (M2006/2008/2008HF/2016S/2616/2216ACD).

Procedure 3
Installing M2000 Series Meridian Digital Telephones (M2006/M2008/M2008HF/M2016S/M2616/M2216ACD)

1 Complete the wiring and cross-connections (loop power) before connecting the telephone to the TELADAPT connector. See Figure 11 on page 56 and Figure 12 on page 57.

2 Place the telephone upside down on a number of sheets of soft, clean paper on a solid, level work surface to prevent damage to movable keys and the telephone's face.

3 Connect the handset cord (5-conductor TELADAPT connectors) to the handset and snap it into place (not applicable to M2216ACD).

4 Connect the other end of the handset cord to the connector in the bottom cover of the telephone. Turn the smooth side of the handset cord up (away from the telephone bottom cover) before tucking it under the restraining tab to ensure that the telephone will sit level on the desk after installation is complete (not applicable to M2216ACD).

5 Connect the line cord to the telephone bottom cover. Route the cord through the channels.

6 Turn the telephone right side up and place it in the normal operating position.

7 Print the directory number on the designation card. Using a paper clip, remove the number lens from the telephone. Insert the designation card and snap the lens back into place.

8 Designate the feature keys.

9 Insert the line cord TELADAPT connector into the connecting block (jack) and snap it into place.

10 Perform the self-test (see Procedure 4 on page 57) and acceptance test procedures. See LD 31 in the *Software Input/Output: Administration* (553-3001-311).

11 Supply the user with a Quick Reference Card and all user documentation. Make sure the SPRE number is printed on the Quick Reference Card.

End of Procedure

Figure 11
M2000 Series Meridian Digital Telephone connections

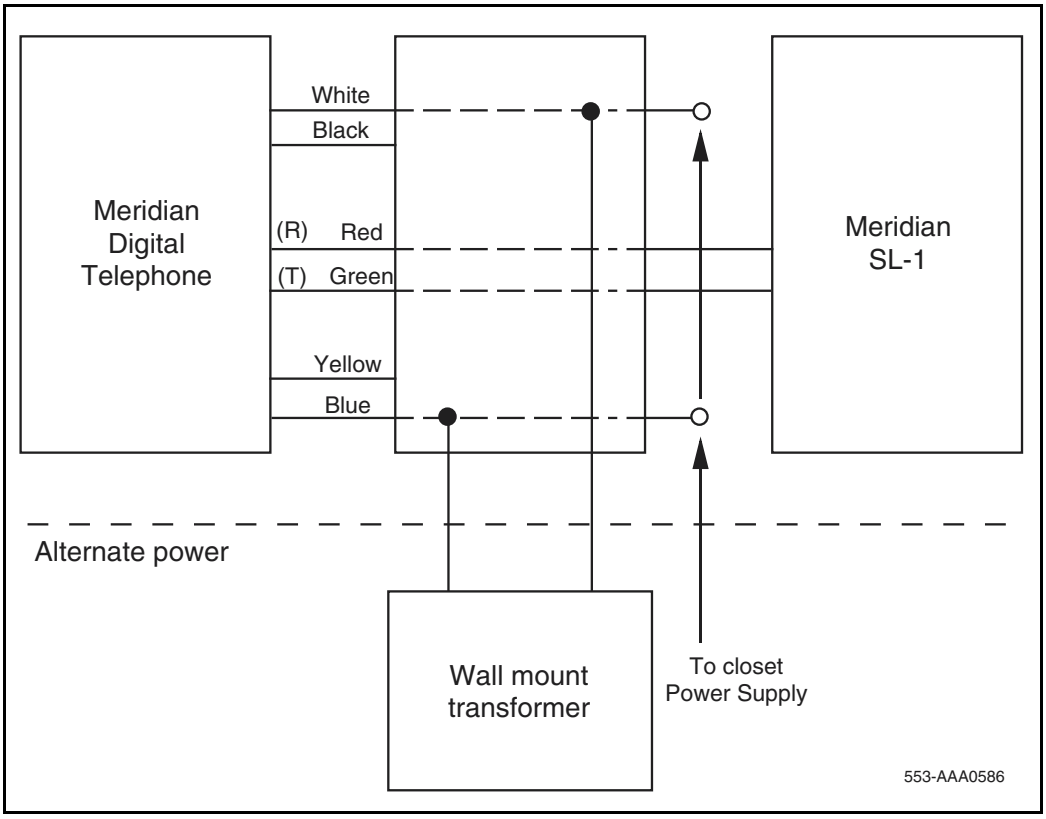

Figure 12
M2000 Series Meridian Digital Telephone cross-connections.

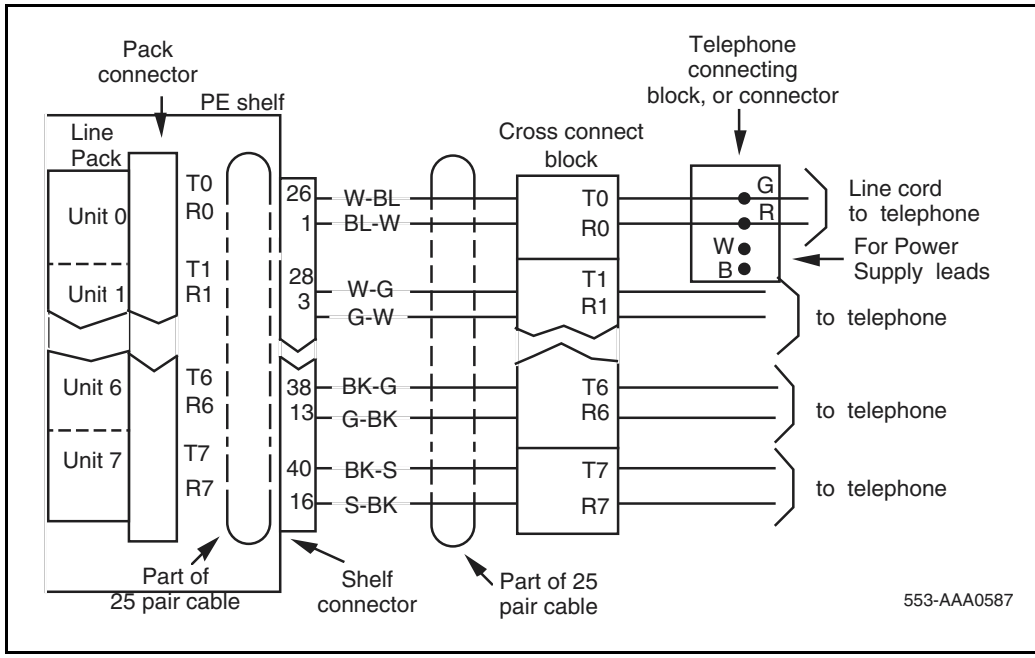

M2000 Series Meridian Digital Telephones have a self-testing capability. Follow the steps in Procedure 4 to perform the self-test after installing an M2000 Series Meridian Digital Telephone or any of the hardware options to ensure proper operation.

Procedure 4
M2000 Series Meridian Digital Telephones self-test

1 Unplug the line cord from the telephone.

2 While holding down the RLS key, plug in the line cord to the telephone. Let go of the RLS key.

3 Follow the steps in Table 7 to perform the necessary steps and check results.

Table 7
Meridian Modular Telephones self-test steps and results (Part 1 of 2)

Step	Action	Result
1	Begin test (plug in line cord while holding down the RLS key). The handset is on hook.	Speaker beeps once, all LCDs flash. Message Waiting lamps light steadily. Display reads:LOCAL DIAGNOSTIC MODE PRESS RLS KEY TO EXIT
2	Press each Function key, from zero to fifteen (if there are Key Expansion Modules, continue pressing the Function keys, in any order).	Adjacent LCD goes off when a key is pressed.
3	Press the Hold key.	Speaker beeps.
4	Press each dial pad key.	Speaker beeps each time a key is pressed.
5a	Lift the handset (if applicable). Press the dial pad keys. Replace the handset.	Speaker beeps. Handset beeps.

Table 7
Meridian Modular Telephones self-test steps and results (Part 2 of 2)

Step	Action	Result
5b	Plug in the headset (if applicable). Press the dial pad keys. Unplug the headset.	Speaker beeps. Headset beeps.
6	Press the right side of the volume control key. Press the right side of the volume control key. Press the right side of volume control key. Press the right side of the volume control key. Press the right side of the volume control key. Press the right side of the volume control key. Press the right side of the volume control key.	Speaker beeps. Display is filled with dark squares. Speaker beeps. Display is blank. Speaker beeps. Display shows symbols including digits 0–9 and uppercase alphabet Speaker beeps. Display shows symbols including upper- and lowercase alphabet. Speaker beeps. Display shows various symbols. Speaker beeps. Display shows symbols. Speaker beeps. Display is filled with dark squares.
7	Press the RLS key (end of test).	Message Waiting lamp goes off. Display shows idle screen within 10 seconds.

Install an M2317 telephone

Follow the steps in Procedure 5 to install an M2317 telephone.

Procedure 5
Installing the M2317 telephone

1. Complete the wiring and cross-connection as shown in Figure 13 on page 62 before connecting the telephone to the TELADAPT connector block.
2. Place the telephone upside down on a number of sheets of soft, clean paper and on a solid, level work surface to prevent damage to movable keys and the telephone's face.
3. Connect the handset cord 4-conductor TELADAPT connectors to the handset and to the telephone and snap into place.
4. Turn the smooth side of the cord away from the telephone base and secure it under the restraining tab. This ensures that the telephone sits level after the installation is complete.
5. Connect the 6-conductor line cord to the telephone base, and place it under the restraining tabs.
6. Turn the telephone face up, and place it in the normal operating position.
7. Print the Directory Number (DN) on the designation card and place it in the designation card holder.
8. Designate button labels for programmable keys, and place them under the button cover.
9. Insert the line cord TELADAPT connector block and snap it into place. Place the line cord under the restraining tabs.
10. Plug the 5 V power supply connector into the back of the telephone.
11. Plug the power supply into an ac utility outlet.
12. After the M2317 digital telephone is connected to a line that is both enabled and designated as an M2317 digital line, the startup screen displays INITIALIZATION V6.4. Within 5 seconds, the Idle state screen is displayed, and the M2317 is operational. The term V6.4 represents the firmware issue number, and can differ with some installations.

13 If the M2317 has been connected to a line that is designated as a digital line, but is not enabled, the display prompts CONTACT SYSTEM ADMINISTRATOR. The line must be enabled using LD 32 from the maintenance terminal, and by enabling the features outlined in the work order. Refer to *Software Input/Output: Administration* (553-3001-311) for the required routines, prompts, and responses.

If the M2317 has been connected to a line that is neither defined as a digital line nor enabled, refer to *Software Input/Output: Administration* (553-3001-311) for required routines, prompts, and responses.

14 Verify that all the requested features are enabled by accessing them with the soft keys, or programmable keys, from the M2317 telephone and observing the display screen.

15 Perform the self-test (see Procedure 6 on page 63) and acceptance test procedures. See LD 31 in the *Software Input/Output: Administration* (553-3001-311).

End of Procedure

Figure 13
M2317 digital telephone cross-connections

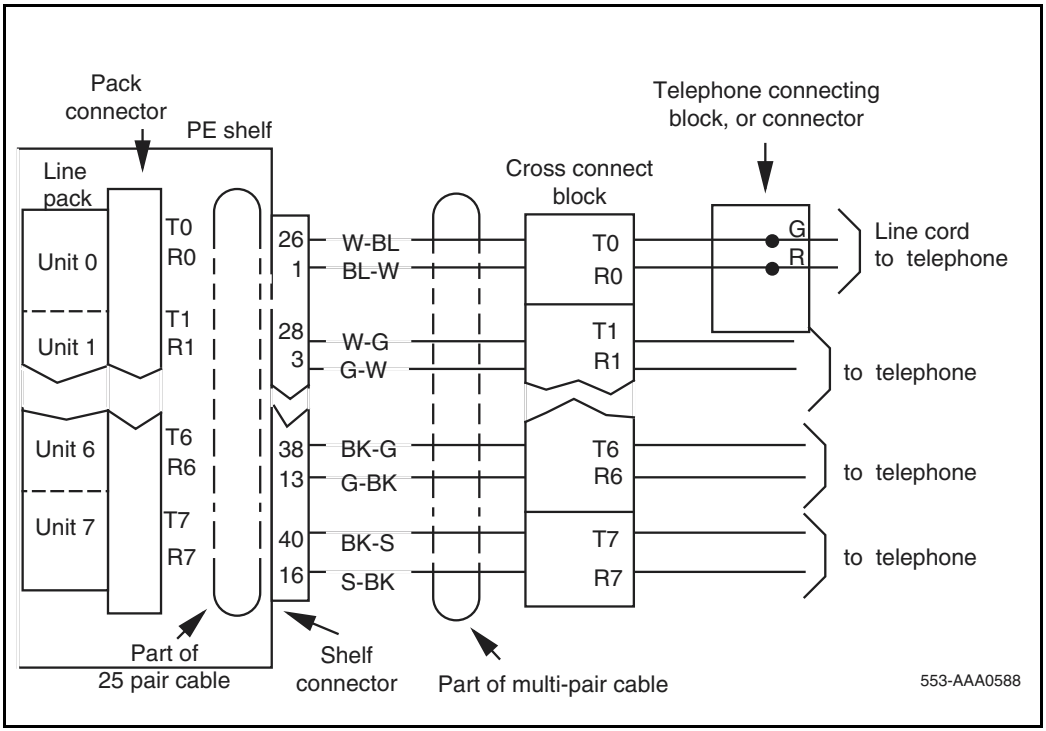

M2317 telephone self-test

The M2317 telephone has a self-testing capability. This test can be performed whether or not the telephone is connected to the system. The test checks the proper functioning of the keys and LCD indicators on the set.

Follow the steps listed in Procedure 6 on page 63 and Table 8 to perform the M2317 self-test.

Procedure 6
Performing the M2317 telephone self-test

1. Connect the telephone to the ac power supply.

   The LCD screen displays “Initialization … vX.X” (note that there is only a 3 to 5 second window to begin Step 2).

2. Press Softkey 5 twice, then press Softkey 4 twice.

3. Follow the steps in Table 8 to perform the necessary self-test steps and check results.

4. Unplug the power supply to end the test.

Table 8
M2317 telephone key/LCD indicator self-tests

Step	Key operated	Required response
1	Any programmable key	Toggles the corresponding indicator on/off
2	Any dial pad key	Displays the corresponding character in the top line of the display screen
3	Volume control	Displays characters “>” for volume up and “<” for volume down in the top line of the display screen
4	Softkey 1	Both display lines are filled with characters as follows: ABCDEFGHIJKLMNOPQRSTUVWXYZABCDEFGHIJKLMN OPQRSTUVWXYZABCDEFGHIJKLMNOPQRSTUVWXYZAB
5	Softkey 2	Both display lines are filled with characters as follows: abcdefghijklmnopqrstuvwxyzabcdefghijklmn opqrstuvwxyzabcdefghijklmnopqrstuvwxyzab
6	Softkey 3	All LCD pixels are turned on
7	Softkey 4	Display is blank
8	Softkey 5	Both display lines are filled with characters as follows: 88888888888888888888888888888888888888888 88888888888888888888888888888888888888888

When the M2317 digital telephone or the data option fails to function properly, follow the steps listed in Table 9 in sequence to isolate the problem area.

Table 9
M2317 trouble-locating procedures (Part 1 of 3)

Step	Action
	Loop power failure
1	Plug in the telephone.
2	The LCDs flash once to indicate the power is OK.
	Data communication failure
1	If voice communication is normal but data communication fails, check for DC output voltage at the power supply connector pins or replace the power supply plug-in transformer. Attempt to make a data call from the terminal keyboard. Refer to “Meridian Programmable Data Adapter” on page 50. If not successful, proceed with Step 2.
2	Make a call to the DN (voice or data) to verify that the port is enabled.
3	Use an EIA or RS-232 breakout box in conjunction with the terminal cable to verify lead states and replace or repair cable if pinouts are incorrect. Attempt to make a data call from the terminal keyboard. Refer to “Meridian Programmable Data Adapter” on page 50. If unsuccessful, proceed with Step 4.
4	Remove the transformer from the ac receptacle, unplug the 5-pin power supply connector at the back of the telephone, and replace the data option circuit board. See Procedure 22 on page 131. Reconnect the data option power supply. Make a new attempt to start a data call. If trouble persists, continue with the ISDLC failure procedure.
5	Use the self-test procedure to verify that the telephone electronics are operating correctly.

Table 9
M2317 trouble-locating procedures (Part 2 of 3)

Step	Action
	ISDLC failure
1	Go to the system maintenance terminal (TTY or CRT) and check for displayed error and location codes. An “NWS 401 L S C” or an “NWS 501 L S C U” code indicates that the automatic (routine) diagnostic test has detected a fault. Check for the following indications: L = faulty circuit card (ISDLC card) loop number S = circuit card location (shelf number) C = number of the faulty circuit card U = unit number of a faulty telephone (appears only in conjunction with the NWS 501 code)
2	Replace the faulty components. Try to establish a call. If unsuccessful, check the telephone.

Table 9
M2317 trouble-locating procedures (Part 3 of 3)

Step	Action
	Telephone (voice or dialing) failure
1	Check the line cord and handset cord to determine if all TELADAPT connectors are firmly in place and reconnect the loose ones. Ensure that the polarity of the Tip and Ring leads is correct. Lift the handset and listen for the dial tone and/or dial a directory number. If unsuccessful, proceed with Step 2.
2	Wiggle the line cord and/or handset cord while listening for sounds from the handset. If crackling or ticking sounds are heard, replace the cords. Try to establish a call. If unsuccessful, proceed with Step 3.
3	Replace the telephone. Try to establish a call. If unsuccessful, proceed with Step 4.
4	Check the wiring between the line card, distribution panel, and telephone for breaks or loose connections. If necessary, rerun the wiring. Operate the telephone.
Note: If no error codes are shown at the maintenance terminal, the Network and Signaling Diagnostic (LD 30) can be loaded and run manually from the system TTY. Refer to *Software Input/Output: Administration* (553-3001-311).	

Installing an M2616CT telephone

Follow the steps in Procedure 7 to install an M2616CT telephone.

DANGER OF ELECTRIC SHOCK
The M2616CT is not intended for direct connection to the Public Switched Telephone Network (PSTN) or other exposed plant networks, because the exposed pins on the handset cradle (where the handset sits) creates a possible outlet for harmful voltage. The M2616CT is designed to be used with a Meridian PBX.

Procedure 7
Installing an M2616CT telephone

1. Complete the wiring and cross-connections (loop power) before connecting the telephone to the connection block.
2. Place the telephone upside down on a padded level work surface to prevent damage to the telephone face.
3. Connect the line cord into the bottom of the telephone base. Route the cord through the channels.
4. Plug the ac adapter (Class 2 power supply) output DIN connector into the bottom of the M2616CT telephone next to the line cord connection. Route the cord through the channels.
5. Turn the telephone right side up and place it in the normal operating position.
6. Insert the line cord TELEDAPT connector into the connecting block.
7. Plug the ac adapter (Class 2 power supply) input into the commercial 11V electrical main outlet.
8. Print the directory number on the designation card. Use a paper clip to remove the number lens from the telephone. Insert the designation card and snap the lens back into place
9. Designate the feature keys.

End of Procedure

Installing a battery in the M2616CT telephone

Follow the steps in Procedure 8 to install the battery in the M2616CT telephone.

Procedure 8
Installing the battery in the M2616CT telephone

1. Place the handset battery in the base of the handset so the battery engages with the contact points.
2. Snap the battery into place.
3. Slide the spare battery (optional purchase) into the spare battery compartment, located at the top of the handset cradle. The yellow indicator lights when the battery is properly connected.

Result: The yellow indicator lights when the battery is properly connected. The battery begins to charge as soon as the handset is placed in its cradle. The main handset battery 700 mAh fully recharges in approximately 2.25 hours, the 1000 mAh battery charges in 3 hours.

Note: The spare battery charging port on the base unit provides a “trickle charge” that charges the battery at a slower rate than through the handset.

End of Procedure

Figure 14
Installing the M2616CT battery

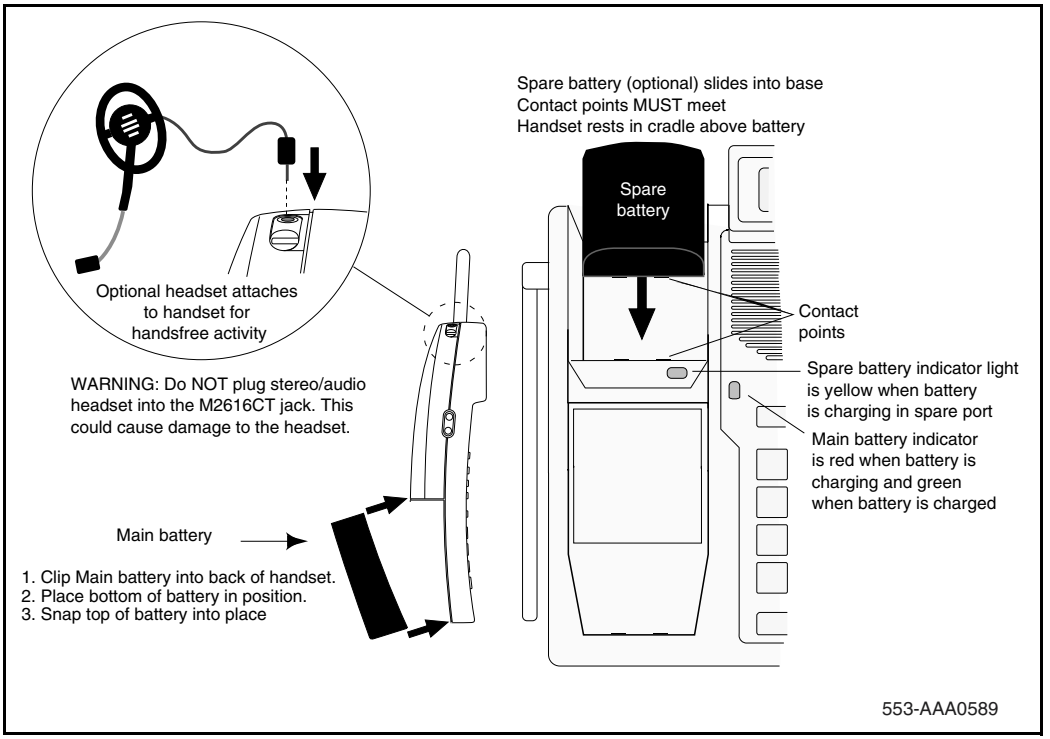

Optional wall mount for the M2616CT telephone

The M2616CT base is equipped with a reversible footstand that allows the telephone to be mounted on the wall. Follow the steps in Procedure 9 on page 69 to install the M2616CT telephone on a wall mount.

Procedure 9
Mounting the M2616CT on the wall

1. Remove the handset and place the telephone upside down on a level work surface covered with soft material to prevent damage to movable keys and the telephone face.
2. Disconnect all cords from the set.
3. Remove the two screws from the footstand assembly.
4. Unsnap the footstand assembly by pressing inward at the back of the footstand where it meets the base and pulling upward.
5. Rotate the footstand 180 degrees and screw the footstand back into place to the set's bottom cover.
6. Tighten all screws and replace all cords.
7. Mount the telephone on the wall using the wall-mount holes provided on the bottom of the footstand.

End of Procedure

Configuring the M2616CT

To configure the M2616CT set refer to *Software Input/Output: Administration* (553-3001-311) for complete information and procedures on using LD 11 to configure the Meridian Digital Telephone. For the Locator key (key 14) to function, do not assign a feature to this key. Handsfree is required for the M2616CT to function properly.

M2616CT handset registration to base unit

Each M2616CT handset is automatically registered to its respective base unit. When a substitute handset is required for troubleshooting purposes, a different M2616CT handset can be re-registered by placing the handset

on-hook, and unplugging, then re-plugging in the ac power adapter and telephone line cord.

M2616CT Manual RF (Radio Frequency selection)

The M2616CT uses 900 MHz narrowband signaling. Other products also use these channels. Due to interference from other products, there might be a time when it is necessary to confirm the user's M2616CT so that other 900 MHz products will not cause interference. The Manual RF Selection feature is a function available on Key 14, in addition to the Locator feature.

Follow the steps in Procedure 10 to implement the Manual RF Selection feature.

Procedure 10
Implementing the M2616CT Manual RF (Radio Frequency selection)

1. Add a feature (any feature) on the system's Key 14.
2. Press Key 14 and AUTO appears on the display.
3. Toggle the volume key until the desired channel (CH00 through CH19) is reached. See Table 10 on page 70.
4. Press Key 14 again.
5. Remove the feature from Key 14 to have access to the Locator feature. Selecting one channel instead of scanning provides quicker response to the voice channel and clears the interference in the area.

Table 10
Frequency Ranges

Channel	Frequency	Channel	Frequency	Channel	Frequency	Channel	Frequency
CH00	902.6	CHO5	910.6	CH10	915.8	CH15	921.4
CH01	904.0	CH06	912.0	CH11	916.4	CH16	923.0
CH02	905.6	CH07	914.2	CH12	918.4	CH17	924.8
CH03	907.2	CH08	914.8	CH13	919.6	CH18	926.4
CH04	908.8	CH09	915.2	CH14	921.4	CH19	927.6

M3900 Series Meridian Digital Telephones

The M3900 Series Meridian Digital Telephones provide versatile functionality to the desktop environment. The M3900 Series Meridian Digital Telephones have five models:

- M3901 Entry Level Telephone
- M3902 Basic Telephone
- M3903 Enhanced Telephone
- M3904 Professional Telephone
- M3905 Call Center Telephone

For more information on the M3900 Series Meridian Digital Telephone, refer to “M3900 description” on page 345.

Designate telephones

Before designating telephones, check the work order for the features enabled and key designations. Designate each key by placing its feature name (from the designation sheet) in the key cap that fits on the key.

Designate 500-type telephones

Follow the steps in Procedure 11 to designate analog 500-type telephones:

Procedure 11
Designating 500-type telephones

1. Remove the finger wheel and number card from its envelope.
2. Designate the number card with the appropriate directory number and station designator.
3. Insert the number card into the finger wheel (making sure the number card is properly oriented).
4. Place the telephone on a flat surface.
5. Place the finger wheel over the clamp on the dial, with the “0” hole directly over the digit “9,” making sure the finger wheel depressions are properly positioned on the prongs of the clamp plate.

6 Rotate the finger wheel counterclockwise until the clamp spring snaps into the notch on the underside of the finger wheel.

End of Procedure

Follow the steps in Procedure 12 on page 72 to remove the finger wheel from 500-type telephones.

Procedure 12
Removing the finger wheel from 500-type telephones

1 Place the telephone on a flat surface.

2 Rotate the finger wheel clockwise as far as possible.

3 Insert a paper clip into the small hole between the digits “9” and “0” located on the edge of the grooved section of the finger wheel.

4 Press down on the releaser to disengage the finger wheel clamp spring.

5 Rotate the finger wheel further clockwise until the clamp spring releases.

6 Remove the finger wheel when it becomes loose. The dial returns to normal position.

End of Procedure

Designate 2500-type telephones

Follow the steps in Procedure 13 to designate 2500-type telephones.

Procedure 13
Designating 2500-type telephones

1 The designation window is located directly below the dial pad. Insert a paper clip into the hole at the left or right end of the designation window.

2 Gently pry the window toward the center and remove.

3 Insert number tag with the appropriate directory number and station designator, and replace the designation window.

End of Procedure

Designate M2000 Series Meridian Digital Telephones

Follow the steps in Procedure 14 on page 73 to designate M2000 Series Meridian Digital Telephones.

Procedure 14
Designating M2000 Series Meridian Digital Telephones

1. Remove the cap from each key requiring a designation.
2. Place the designation in the cap, place the cap over the corresponding key, and gently press down. Repeat for all keys requiring designations.
3. Insert a paper clip into the hole at the left or right end of the designation window.
4. Gently pry the window toward the center and remove, and insert the number tag.
5. Replace the designation window.

End of Procedure

Connect analog (500/2500-type) telephones

Follow the steps in Procedure 15 to connect analog (500/2500-type) telephones.

Table 11 on page 74 lists the NE-500/2500 telephone connections.

Procedure 15
Connecting analog (500/2500-type) telephones

1. Ensure that the terminal connector is compatible with the telephone connector.
2. Connect the telephone mounting cord.

   TELADAPT cords (NE-625F connector) do not require terminations. Insert the plastic connector on the end of the telephone mounting cord into the NE-625F-type receptacle.

3 Connect the mounting cord to an NE-284-74-5001 Amphenol adapter if re-using a 16- or 25-pair cable. Plug the adapter into the cable connector. Fasten the connector together with the screws provided at the end of each connector.

End of Procedure

Table 11
NE-500/2500 telephone connections

Mounting cord	NE-47QA or QBBIB block designation	NE-284-74-5001 designation	Cable color pairs (16 to 25 not used)	Connect to TN
TIP (green)	G	1T	W-BL	TIP
RING (red)	R	1R	BL-W	RING
GND (yellow)	BK	X2		
	Y	X1		

Cross-connect the telephones

Be sure to connect the telephones as shown in Figure 15 on page 76 or Figure 16 on page 81. Figure 15 on page 76 provides the diagram for cross-connecting analog (500/2500-type) telephones on a Peripheral Equipment (PE) module.

Table 12 on page 77, Table 13 on page 78, and Table 14 on page 79 show analog (500/2500-type) telephone cross-connections on an Intelligent Peripheral Equipment (IPE) module.

Cross-connections for the M2000 Series Meridian Digital Telephones are shown in Figure 16 on page 81.

Follow the steps in Procedure 14 on page 79 to cross-connect the telephones.

Procedure 16
Cross-connecting the telephones

1 Locate the telephone terminations at the cross-connect terminal.

Telephone terminations are located on the vertical side of the frame when frame-mounted blocks are used and in the blue field when wall-mounted blocks are used.

2 Connect Z-type cross-connecting wire to the leads of the telephone. See Table 15 on page 80 and Table 16 on page 80.

3 Locate the line circuit card (TN) terminations.

Line circuit card (TN) terminations are located on the horizontal side of the distributing frame when frame-mounted blocks are used and in the white field when wall-mounted blocks are used.

4 Run and connect the other end of the cross-connecting wire to the assigned TN terminal block.

End of Procedure

Figure 15
NE-500/2500-type telephone cross-connections for PE modules

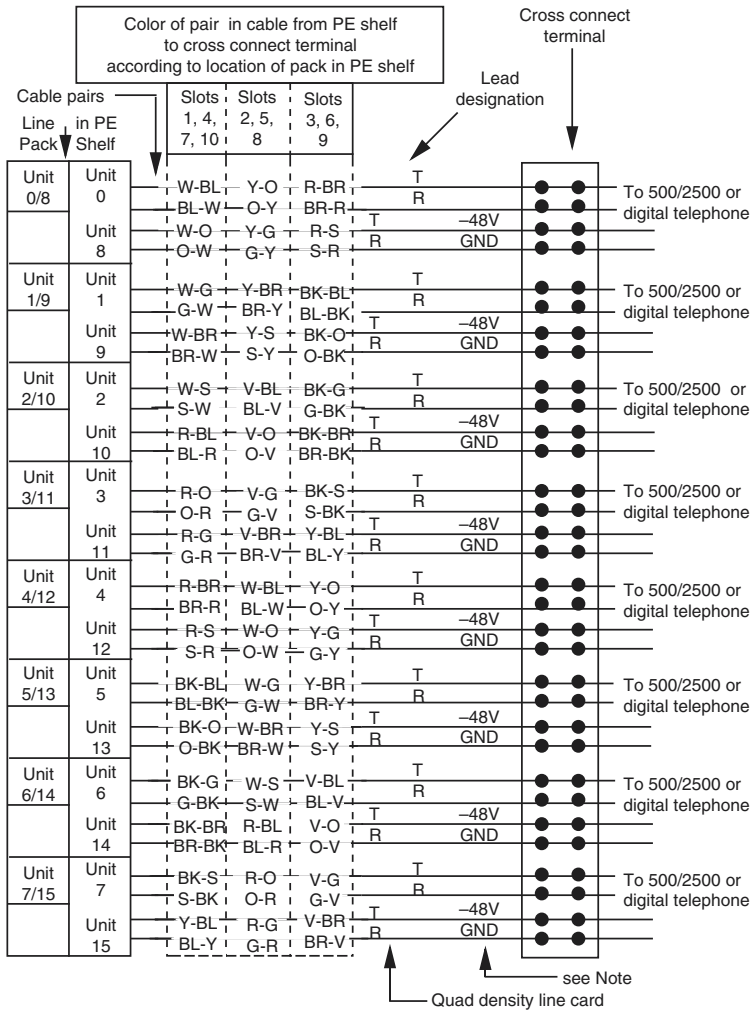

Note: This connection applies only to line cards equipped with the Parallel Message Waiting Lamp feature. This connects to a second message waiting indication, a lamp bank for example. The maximum loop resistance is 2000½.

553-AAA0590

Table 12
500/2500 line card pair-terminations for IPE module connectors A, E, K, R

Pair	Pins	Pair color	I/O panel connectors				Unit
			A	E	K	R	16/card
1T/1R	26/1	W-BL/BL-W	slot 0	slot 4	slot 8	slot 12	0
2T/2R	27/2	W-O/O-W					1
3T/3R	28/3	W-G/G-W					2
4T/4R	29/4	W-BR/BR-W					3
5T/5R	30/5	W-S/S-W					4
6T/6R	31/6	R-BL/BL-R					5
7T/7R	32/7	R-O/O-R					6
8T/8R	33/8	R-G/G-R					7
9T/9R	34/9	R-BR/BR-R					8
10T/10R	35/10	R-S/S-R					9
11T/11R	36/11	BK-BL/BL-BK					10
12T/12R	37/12	BK-O/O-BK					11
13T/13R	38/13	BK-G/G-BK					12
14T/14R	39/14	BK-BR/BR-BK					13
15T/15R	40/15	BK-S/S-BK					14
16T/16R	41/16	Y-BL/BL-Y					15

Table 13
500/2500 line card pair-terminations for IPE module connectors B, F, L, S

Pair	Pins	Pair color	I/O panel connectors				Unit
			B	F	L	S	16/card
1T/1R	26/1	W-BL/BL-W	slot 1	slot 5	slot 9	slot 13	0
2T/2R	27/2	W-O/O-W					1
3T/3R	28/3	W-G/G-W					2
4T/4R	29/4	W-BR/BR-W					3
5T/5R	30/5	W-S/S-W					4
6T/6R	31/6	R-BL/BL-R					5
7T/7R	32/7	R-O/O-R					6
8T/8R	33/8	R-G/G-R					7
9T/9R	34/9	R-BR/BR-R					8
10T/10R	35/10	R-S/S-R					9
11T/11R	36/11	BK-BL/BL-BK					10
12T/12R	37/12	BK-O/O-BK					11
13T/13R	38/13	BK-G/G-BK					12
14T/14R	39/14	BK-BR/BR-BK					13
15T/15R	40/15	BK-S/S-BK					14
16T/16R	41/16	Y-BL/BL-Y					15
17T/17R	42/17	Y-O/O-Y	slot 2	slot 6	slot 10	slot 14	0
18T/18R	43/18	Y-G/G-Y					1
19T/19R	44/19	Y-BR/BR-Y					2
20T/20R	45/20	Y-S/S-Y					3
21T/21R	46/21	V-BL/BL-V					4
22T/22R	47/22	V-O/O-V					5
23T/23R	48/23	V-G/G-V					6
24T/24R	49/24	V-BR/BR-V					7
25T/25R	50/25	V-S/S-V					Spare

Table 14
500/2500 line card pair-terminations for IPE module connectors C, G, M, T

Pair	Pins	Pair color	I/O panel connectors				Unit
			C	G	M	T	16/card
1T/1R	26/1	W-BL/BL-W	slot 2	slot 6	slot 10	slot 14	8
2T/2R	27/2	W-O/O-W					9
3T/3R	28/3	W-G/G-W					10
4T/4R	29/4	W-BR/BR-W					11
5T/5R	30/5	W-S/S-W					12
6T/6R	31/6	R-BL/BL-R					13
7T/7R	32/7	R-O/O-R					14
8T/8R	33/8	R-G/G-R					15
9T/9R	34/9	R-BR/BR-R	slot 2	slot 6	slot 11	slot 15	0
10T/10R	35/10	R-S/S-R					1
11T/11R	36/11	BK-BL/BL-BK					2
12T/12R	37/12	BK-O/O-BK					3
13T/13R	38/13	BK-G/G-BK					4
14T/14R	39/14	BK-BR/BR-BK					5
15T/15R	40/15	BK-S/S-BK					6
16T/16R	41/16	Y-BL/BL-Y					7
17T/17R	42/17	Y-O/O-Y					8
18T/18R	43/18	Y-G/G-Y					9
19T/19R	44/19	Y-BR/BR-Y					10
20T/20R	45/20	Y-S/S-Y					11
21T/21R	46/21	V-BL/BL-V					12
22T/22R	47/22	V-O/O-V					13
23T/23R	48/23	V-G/G-V					14
24T/24R	49/24	V-BR/BR-V					15
25T/25R	50/25	V-S/S-V					Spare

Table 15
Z-type cross-connecting wire

Size	Gauge	Color	Designation
1 pr	22	Y-BL BL-Y	Tip Ring
3 pr	24	W-BL BL-W W-O O-W W-G G-W	Voice T Voice R Signal T Signal R Power Power

Table 16
Inside wiring colors

Inside wiring colors		Connect to equipment TN
Z station wire	**16/25-pair cable**	
G	**W-BL**	**First pair Tip**
R	**BL-W**	**First pair Ring**
BK	**W-O**	**Second pair Tip**
Y	O-W	Second pair Ring

Figure 16
M2000 Series Meridian Digital Telephone cross-connections

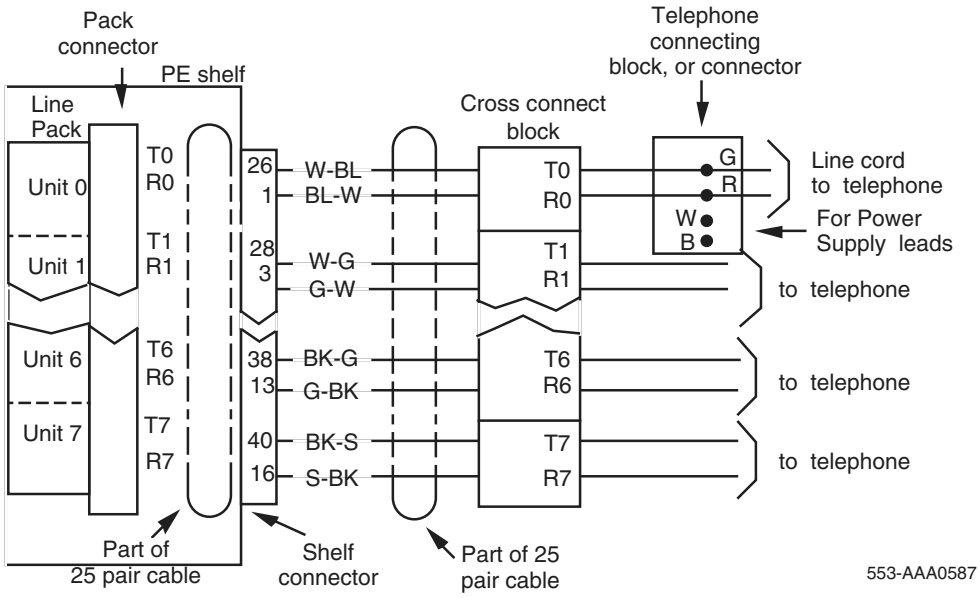

M2000 description

Contents

This section contains information on the following topics:

Introduction

This chapter provides feature, add-on module, relocation, and specification information for the M2006, M2008, M2008HF, M2616, M2016S, and M2216ACD Meridian Digital Telephones.

There are three distinct versions of M2000 Series Meridian Digital Telephones. All three versions are supported. The versions can be clearly distinguished by the first four letters in the upper left-hand corner of the model identification label on the bottom of the telephone.

The three versions are the “NTZK” models, the “NT2K” models with date code prior to April 24, 1998, and both the “NT9K” models and the “NT2K” models with date code of April 24, 1998 and later. In addition, the two jacks

face in the same direction on “NT2K” and “NT9K” telephones, and in opposite directions on “NTZK” telephones. When appropriate, differences between the models are noted in this document.

M2000 Series Meridian Digital Telephones are designed to provide cost-effective integrated voice and data communication. These telephones communicate with the Succession 1000M, Succession 1000, and Meridian 1 using digital transmission over standard twisted-pair wiring. They interface with the Succession 1000M, Succession 1000, and Meridian 1 using the Integrated Services Digital Line Card (ISDLC), or the Digital Line Card (DLC), (NT8D02). No additional hardware is required at the line circuit to provide data communication.

M2000 Series Meridian Digital Telephones are connected to the system through a two-wire loop carrying two independent 64 kbs PCM channels with associated signaling channels. One of the two PCM channels is dedicated to voice; the other is dedicated to data traffic.

Line cords and handset cords on all M2000 Series Meridian Digital Telephones are equipped with standard modular connectors for easy and quick connecting procedures.

The telephone interfaces with the Digital Line Card (DLC) or ISDLC in the Peripheral Equipment (PE) shelf of the system. The DLC supports 16 voice and 16 data ports. The ISDLC supports eight voice and eight data ports. A TN is assigned to each port through the system software.

General features

M2000 Series Meridian Digital Telephones have the following general features:

M2006 – a single-line telephone with six programmable function keys. See Figure 17 on page 85.

M2008/M2008HF – a multi-line telephone with eight programmable function keys. The M2008HF contains an integrated Handsfree unit. See Figure 18 on page 86.

Figure 17
M2006 telephone

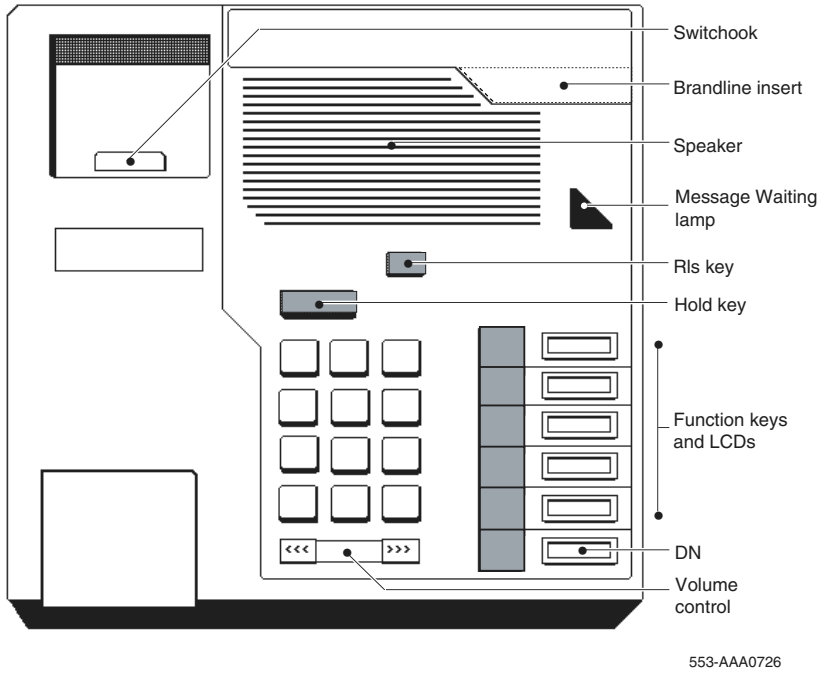

Dimensions:

Length: 8.42 in (216 mm)

Width: 8.42 in (216 mm)

Height: 3.61 in (92.6 mm)

Weight: approximately 2.65 lbs (1.1 kg)

M2616 – a high-performance multi-line telephone with 16 programmable function keys and integrated Handsfree unit. See Figure 19 on page 87.

M2016S – a secure telephone (Security Group Class II approved TSG-210291030), designed to provide on-hook security. It is similar to the M2616, with 16 programmable function keys, but has no Handsfree capability.The M2016S uses relay circuitry that physically disconnects the

Figure 18
M2008/M2008HF telephone

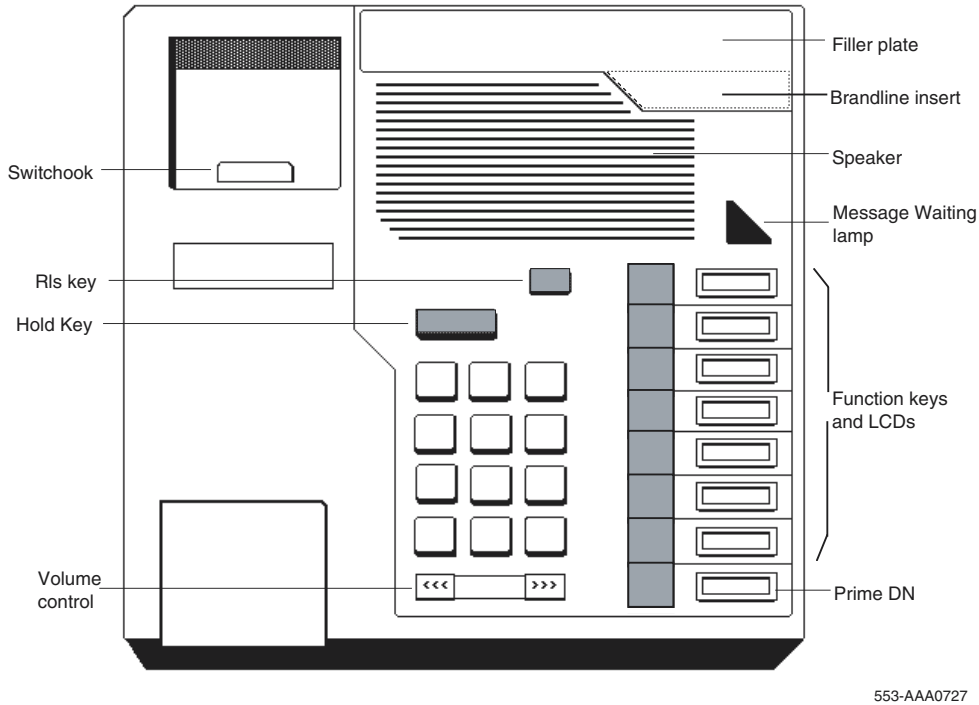

Dimensions:

Length: 8.42 in (216 mm)

Width: 8.42 in (216 mm)

Height: 3.61 in (92.6 mm)

Weight: approximately 2.65 lbs (1.1 kg)

handset from the telephone circuit when the switchhook is depressed. The red LED triangle lights steadily when the phone is not secure. (The phone is not secure when the handset is off the hook, the phone is ringing, or the handset/

piezo relays are connected.) The red LED triangle blinks when a message is waiting. See Figure 19.

Figure 19
M2616 and M2016S telephones

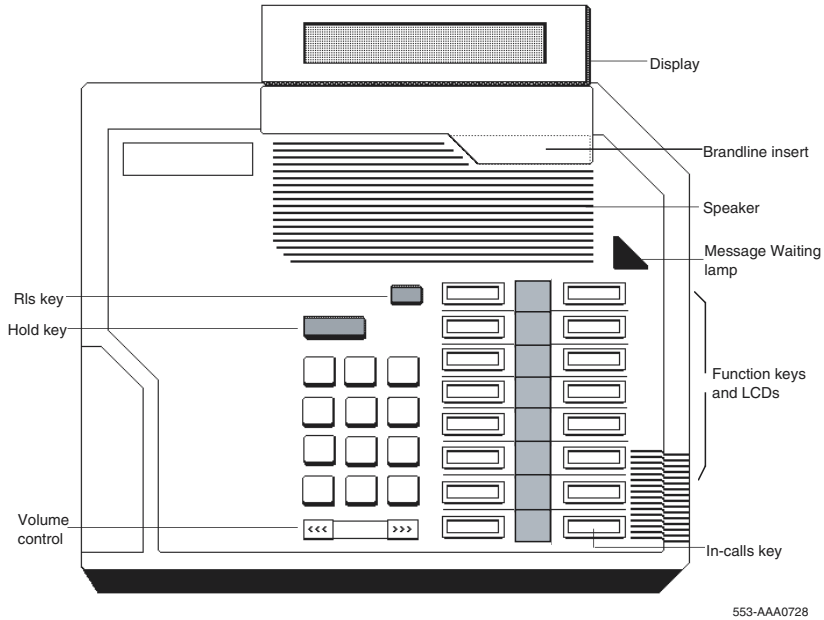

Dimensions:

Length: 9.75 in (251 mm)

Width: 9.45 in (237 mm)

Height: 3.64 in (92.6 mm)

Weight: approximately 2.65 lbs (1.1 kg)

M2216ACD-1 – A multi-line telephone for ACD operations

It has 15 programmable function keys, the Special Applications Display module, and two RJ-32 jacks for modular electret headsets. See Figure 21 on page 89.

Figure 20
M2216ACD-1 and -2 telephones

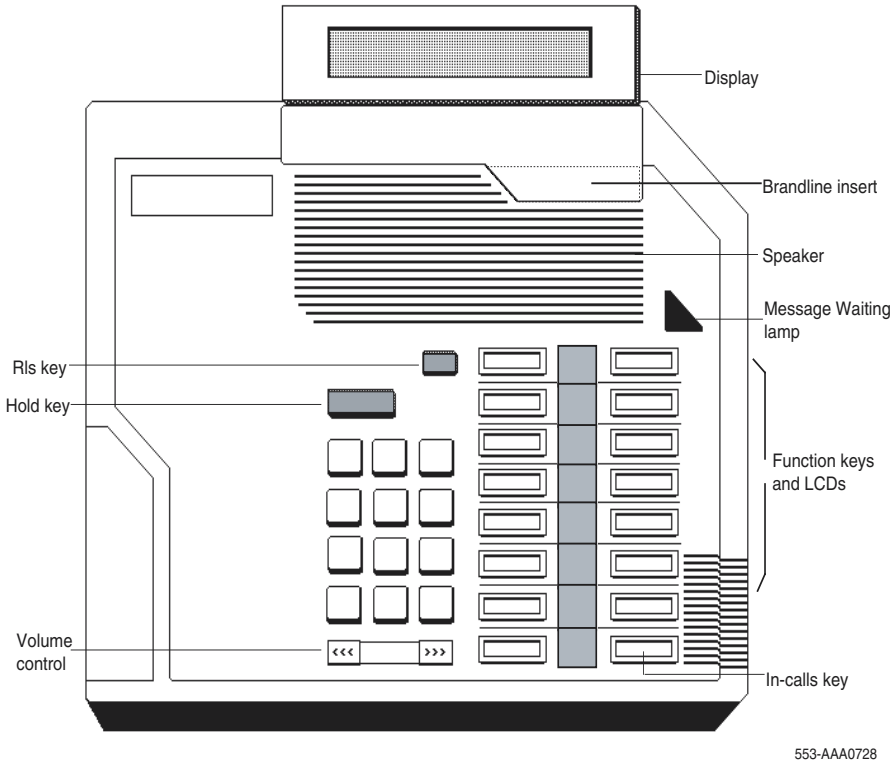

Dimensions:

Length: 9.75 in (251 mm)

Width: 9.45 in (237 mm)

Height: 3.64 in (92.6 mm)

Weight: approximately 2.65 lbs (1.1 kg)

M2216ACD-2 (retired) – a multi-line telephone for ACD operations. It has 15 programmable function keys and the Display module. It is similar to model 1, but with one PJ-327 jack for a carbon agent headset and one RJ-32 jack for an electret supervisor headset. See Figure 21.

Figure 21
M2216ACD-1 and -2 left side showing headset jacks

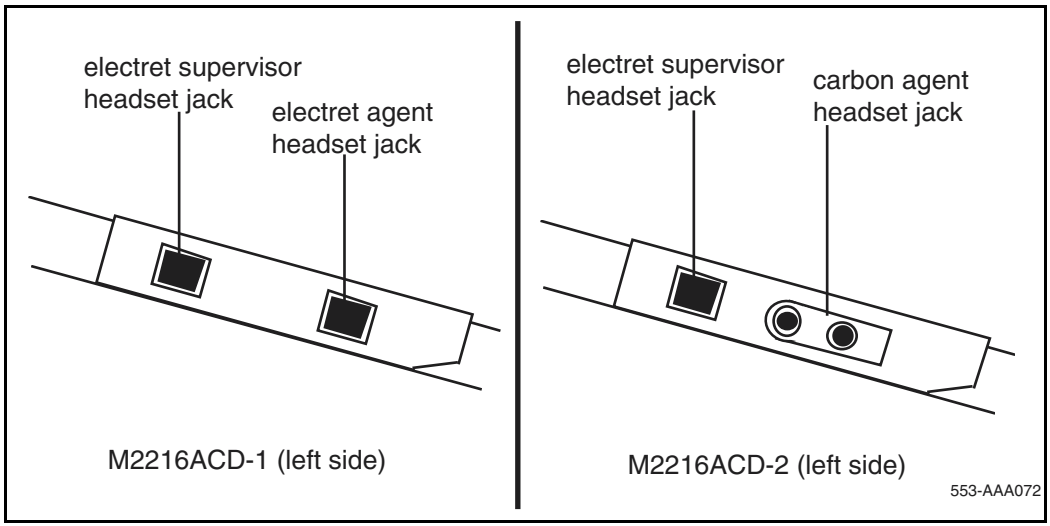

Note: If a headset is desired, the amplified type is strongly recommended.

M2216ACD Headset interface

Using the Program key, the headset/handset interface of the M2216ACD-1 can be adjusted to optimize performance.

The M2216ACD-1 is compatible with most headsets. Amplified headsets are strongly recommended. There are three settings:

- Interface 1 (i.e. Plantronics type)
- Interface 2 (Liberation)
- Interface 3 (Handset)

Note: Try using the headset with each of the three settings to determine which works best. Trial with both internal and external calls is also recommended to determine optimum performance.

Note: When the amplified headset is used, there are two choices for volume control:
(1) the rocker control on the telephone
(2) the switch on the headset

The settings which provide the clearest communication with the least amount of distortion are when the amplifier has a higher setting than the telephone volume control.

The supervisor and agent jacks are not interchangeable. A headset must be plugged into the agent jack if the telephone is to receive ACD calls.

Any recording device connected to the receive path of an M2000 Series Meridian Digital Telephone must meet these requirements:

- isolate power source from the headset/handset jack
- connect in parallel across pins 3 and 4 of the handset/headset jack
- load impedance at least 8K ohms across the audio band

Physical description

Fixed keys

All the M2000 Series Meridian Digital Telephones are equipped with the following fixed keys:

- Hold key
- Release key
- Volume control key

Volume control key
Pressing the right “volume up”* or left “volume down” side of the key increases or decreases the volume for the tone or sound that is currently active.

*All Meridian Digital Telephones, with the exception of the M2016S manufactured after June 1996 are compliant with the HAC volume level requirements issued by the FCC for handset volume control for the hearing impaired. The highest volume level setting provides 13.5 dB over nominal.

The volume levels are saved for subsequent calls until new volume adjustments are made. If the telephone is equipped with a Display module, volume can be adjusted at any time with the setting displayed on the screen (in Program mode).

The volume of the following tones can be changed while they are audible:

- ringing
- Handsfree (M2008HF/M2616)
- handset/headset
- buzz
- on-hook dialing

Note: If the telephone is disconnected, all volume levels return to default values when reconnected.

Message Waiting lamp key
Each M2000 Series Meridian Digital Telephone has a red triangle in the upper right-hand corner that lights brightly to indicate a message is waiting. This LED is the primary message waiting indicator and indicates a message is waiting regardless of whether the telephone has a message waiting key/ lamp pair. CLS Message Waiting Allowed must be enabled in LD 11. See *Software Input/Output: Administration* (553-3001-311).

If a message waiting key/lamp pair is assigned, there are two indications of a message waiting:

- the red Message Waiting triangle lights
- the LCD associated with the Message Waiting key flashes

To avoid the double indication, assign an Autodial key that dials the message center (or voice mail system), or have no key/lamp pair assigned to the message center.

The Message Waiting lamp is also used to indicate security of the M2016S. The red LED triangle lights steadily when the phone is not secure. (The phone is not secure when the handset is off the hook, the phone is ringing, or the handset/piezo relays are connected.) The red LED triangle blinks when a message is waiting.

Handsfree/Mute key (M2008HF & M2616 only)
Handsfree can be software enabled on the M2008HF/M2616. This enables the user to talk to another party without lifting the handset.

Activate Handsfree by pressing the Handsfree/Mute key (key 15, top left for M2616; key 6, below Program for M2008HF) or by selecting a DN without lifting the handset. Once Handsfree is activated, it can be deactivated by picking up the handset or by ending the call using the Release (Rls) key. If Handsfree is not software enabled, another feature can be assigned to the “Handsfree” key.

Note: Software Control – CLS Class of Service for M2008HF

The Class of Service feature for M2616 Handsfree control enables system administrators to enable/disable the Handsfree option on the M2008HF (Handsfree) telephone through software. M2008HF telephones ship from the

factory with a hardware jumper enabled to enable the Handsfree option for existing software releases.

System software overrides the hardware setting and default to Handsfree Denied (HFD.) If the handsfree option is desired, the system administrator simply enables Handsfree through the Class of Service prompt HFA included in LD 11 for the M2008 telephones (consistent with M2616).

Service Change Parameters

LD 11 – Allow/Deny Handsfree for M2008HF

Prompt	Response	Description
REQ:	NEW CHG	
TYPE:	M2008	M2008 Digital Telephone
CLS	(HFD)	Digital Telephone Handsfree Denied
	HFA	Digital Telephone Handsfree Allowed

Handsfree operates as if an off-hook operation had been performed. For example, when the telephone is idle, pressing the Handsfree/Mute key turns on the Handsfree and selects a DN (depending on line selection as assigned through COS), enabling the user to make a call. When a call comes in to an M2008HF/M2616 and the set is ringing, pressing the Handsfree/Mute key turns on the Handsfree and enables the user to answer the incoming call (depending on COS-assigned line selection) without picking up the handset.

Features keys

Each M2000 Series Meridian Digital Telephone has a number of programmable keys with LCD indicators that can be assigned to any combination of directory numbers and features (only one DN for the M2006). The lower right-hand key (key 0) is reserved for the Primary DN.

Note 1: When equipped with a Display module, Meridian Communications Adapter (MCA), or Meridian Programmable Data Adapter (MPDA), key 07 is automatically assigned as the Program key and cannot be changed. Key 05 becomes the Program key on the M2006 if equipped with the MCA or MPDA.

See “M2000 data options” on page 193 for more information on the MCA and MPDA.

Note 2: The M2006 is a single-line telephone and accepts only one DN. The remaining five key/lamp pairs can be assigned any feature that is not considered a DN, such as Transfer, Call Forward, or Conference. Features that cannot be assigned are those that are considered DNs - Voice Call and two-way Hot Line, for example. Attempting to assign more than one DN to the M2006 causes the telephone to disable itself and all LCDs light steadily. It returns to its normal operating state when a service change removes all secondary DNs.

LCD indicators support four key/LCD states:

Function	LCD state
idle	off
active	on (steady)
ringing	flash (60 Hz)
hold	fast flash (120 Hz)

* An indicator fast flashes when a feature key is pressed but the procedure necessary to activate the feature has not been completed.

Data Options

See “M2000 data options” on page 193 for more information on the MPDA and MCA.

Software requirements

The option number for the M2000 Series Meridian Digital Telephones is 170. The mnemonic is ARIE. DSET package 88 and TSET package 89 are required.

Modular options

This section describes the modular options available for M2000 Series Meridian Digital Telephones. Table 17 lists the features and optional hardware available for each telephone.

Table 17
Hardware features and options

	M2006	M2008/ M2008HF	M2616	M2016S	M2216 ACD-1	M2216 ACD-2
Programmable keys	6	8	16	16	15	15
Handsfree microphone		standard on the HF	standard			
Optional hardware available:						
Display		x	x		standard	standard
Key Expansion Module			x		x	x
Meridian Communications Adapter (MCA)	x	x	x		x	x
Meridian Programmable Data Adapter (MPDA)	x	x	x		x	x
External alerter interface	x	x	x		x	x
Analog Terminal Adapter (ATA)	x	x	x		x	x
Brandline insert	x	x	x	x	x	x
Note: In this table, x indicates available features for the telephone type listed in the top row.						

Note: If the telephone is equipped with a Display, Meridian Programmable Data Adapter, or Meridian Communications Adapter, the number of programmable keys is reduced by one, as key 07 (key 05 on M2006) automatically assumes the Program function.

For installation information, see *"Installation and removal of M2000 Series Meridian Digital Telephones" on page 55*. See "M2000 data options" on page 193 for more information on the MPDA and MCA.

Display module

A two-line (24 characters per line) Display module provides system prompts, feedback on active features, and valuable calling party information. In addition, various telephone features can be modified, such as volume and screen contrast, using the Program key (top right function key). A Call Timer that times calls made or received on the prime DN can be enabled.

Note: The display module is not supported on the M2006.

The displays previously available (NT2K24WA, NT2K25YL, and others) have been replaced by display NT2K28xx that eliminates a daughterboard. Two new screens have also been added to support ACD applications:

- Logged Out
- Not Ready

Note: It is possible to adjust the Display screen contrast so that it is too light or too dark to read. If this happens, disconnect and then reconnect the line cord to return to the default settings.

Program key

The Program key is automatically assigned to M2000 Series Meridian Digital Telephones with Display, Meridian Communications Adapter (MCA), or Meridian Programmable Data Adapter (MPDA) added. A variety of display features can be changed, such as screen format, contrast, and language. The Program key also enables changes to data parameters, such as transmission speed and parity, on the MPDA and MCA (if equipped).

The upper right-hand key (key 05 on the M2006 and key 07 on all others) automatically becomes the Program key when Display, MCA, or MPDA is configured with the telephone. The Program key is local to the telephone and shows blank when key assignments in LD 20 are printed.

See “M2000 data options” on page 193 for descriptions of the MCA, MPDA, and ATA and their requirements.

External Alerter interface

The External Alerter Board provides an interface to standard remote ringing devices, such as a ringing unit installed in a location separate from the telephone. The External Alerter interface is not the remote ringer itself, but provides access to standard, off-the-shelf remote ringing devices. The Alerter Board requires additional power. See “Power requirements” on page 103.

The External Alerter interface can be programmed to activate a ringer (or light) when the telephone rings or when the telephone is in use (off-hook).

For information on installing and setting up the External Alerter, see “External Alerter Board” on page 179.

Key Expansion Module

A modular 22-key unit can be attached to any 16-key M2000 Series Meridian Digital Telephone except M2016S. See Figure 22 on page 99. The extra keys can be assigned to any combination of lines and features. Up to two expansion modules can be added to 16-key telephones, providing a total of 60 line/feature keys. A separate footstand is needed for the module(s): one for a single module, one for a double. See “Ordering information” on page 111. The expansion module can require additional power. See “Power requirements” on page 103.

The Key Expansion Module connects to the telephone through a cable running from the base of the telephone. It is physically connected to the telephone by the footstand. NT2K22VH or later vintage key lamp modules are required for CISPR22, Class B compliance.

Brandline insert

The filler plate on the telephone or Display module contains a removable insert designed to accommodate custom labeling. Blank Brandline Inserts can be ordered, and a printer can silk screen a company logo on them. Brandline Inserts snap easily into and out of the filler plate.

M2006/M2008/M2008HF/M2216ACD/M2616 telephones

An electric headset can be used in the handset port of the M2006, M2008, M2008HF, M2616, and M2216ACD telephones. The amplifier must draw less than 400 micro amps from the telephone jack.

The headset should be designed to work with a telephone jack with these characteristics:

- Transmit interface: +5 V through 10K dc bias resistance with maximum current of 500 micro amps. The differential input impedance is 10K ohms. Connects to pins 2 and 5 of the handset jack.
- Receive interface: single ended output with output impedance of 180 ohms. Connects to pins 3 and 4 of the handset jack.

Figure 22
M2616 with Display module and Key Expansion module

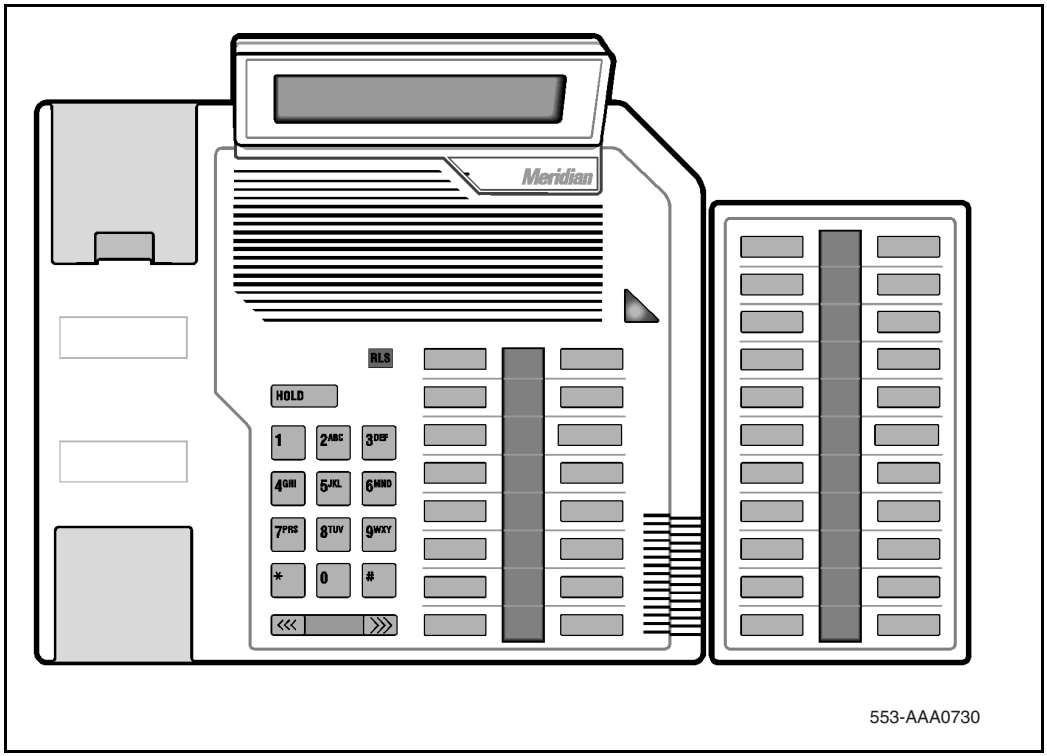

Relocation

This section describes how to relocate an M2000 Series Meridian Digital Telephone and its associated dataport Terminal Number (TN) without the intervention of a technician.

Modular Telephone Relocation is designed specifically for the M2000 Series Meridian Digital Telephones and is an enhancement to Automatic Set Relocation. If dataport TN information exists for the terminal, it is automatically relocated when the telephone is relocated.

When a telephone is relocated-out, a relocation block is built to store the relocation information in the protected data area. The relocation block

includes the old TN, the terminal ID information, the serial number of the telephone, and other information.

This feature uses the unique serial number and terminal ID of the M2000 Series Meridian Digital Telephone to identify the terminal being relocated and to reduce the number of manual steps needed for relocation.

See Automatic Set Relocation in *Features and Services* (553-3001-306) for complete details.

How to relocate an M2000 Series Meridian Digital Telephone

1. Go off-hook, receive dial tone, and enter Relocation Code (either SPRE +81 or Flexible Feature Code).
2. Enter optional security code as defined in LD 15 (a burst of tone confirms that the telephone is relocated-out).
3. Take it to the new location and plug it in (a confirmation buzz from the speaker indicates the telephone is in service).

Specifications

This section lists the specifications required for M2000 Series Meridian Digital Telephones.

Environmental and safety considerations

All digital telephones and their associated options meet the requirements of the Electronic Industries Association (EIA) specification PN-1361.

Temperature and humidity

Operating state:	
Temperature range	0° to 50°C (32° to 104°F)
Relative humidity	5% to 95% (noncondensing). At temperatures above 34°C (93°F) relative humidity is limited to 53 mbar of water vapor pressure.
Storage:	
Temperature range	–50° to 70°C (–58° to 158°F)
Relative humidity	5% to 95% (noncondensing). At temperatures above 34°C (93°F) relative humidity is limited to 53 mbar of water vapor pressure.

Electromagnetic interference

The radiated and conducted electromagnetic interference meets the requirements of Subpart J of Part 15 of the FCC rules for class A computing devices.

NT2K model sets with all options meet CISPR22, Class B requirements.

Local alerting tones

Each telephone provides four alerting tones and a buzz sound. The system controls the ringing cadence by sending tone-ON and tone-OFF messages to the telephone. The alerting tone cadences cannot be changed from the telephone but can be altered for individual M2000 Series Meridian Digital Telephones by software controlled adjustments in the system. See *Software Input/Output: Administration* (553-3001-311).

All other telephony tones, such as dial tone or overflow, are provided by the system from a Tone and Digit Switch.

Alerting tone characteristics

The tone frequency combinations are as follows:

Tone	Frequencies	Warble Rate (Hz)
1	667 Hz, 500 Hz	5.2
2	667 Hz, 500 Hz	2.6
M2006/M2008/M2008HF:		
3	1600 Hz, 2000 Hz	5.2
4	1600 Hz, 2000 Hz	2.6
M2016S/M2616/M2216ACD:		
3	333 Hz, 250 Hz	5.2
4	333 Hz, 250 Hz	2.6

A 500 Hz buzz signal is provided for incoming call notification while the receiver is off-hook.

Line engineering

M2000 Series Meridian Digital Telephones use twisted pair wiring on transmission lines selected by the rules given in “Digital telephones line engineering” on page 493 &c. The maximum permissible loop length is 3500 ft. (1067 m), assuming 24 AWG (0.5 mm) standard twisted wire with no bridge taps. A 15.5 dB loss at 256 kHz defines the loop length limit. (Longer

lengths are possible, depending on the wire's gauge and insulation.) Table 18 gives detailed information on loop lengths.

Table 18
Loop lengths for digital telephones

	NT8D02
PVC insulated cable (polyvinyl chloride)	
22 or 24 AWG	0–3500 ft. (0–1067 m)
26 AWG	0–2600 ft. (0–793 m)
Note 1: No bridge taps or loading coils are allowed.	
Note 2: Effect of line protector at MDF reduces loop length by 500 ft.	

CAUTION
Damage to Equipment
Service Interruption
Use only the line cord provided with the M2000 Series Meridian Digital Telephone. Using a cord designed for other digital telephones could result in damage to the cord or a loss of set functionality.

Power requirements

The M2006, M2008, M2008HF, M2616 (basic configuration and with Display module), and M2216ACD-1 are loop powered. Loop power, originating in the ISDLC or the DLC, consists of a 30 V dc power source and assumes a 3500 ft. (1219 m) maximum loop length of 24 AWG (0.5 mm) wire and a minimum 15.5 V dc at the telephone terminals.

Note: The loop length limit is defined by a 15.5 dB loss at 256 KHz. Longer lengths can be determined using the wire's gauge and insulation.

The Handsfree feature, which is integrated into the M2008HF/M2616, requires no additional power.

Certain configurations of telephones and options need more than basic loop power to operate. Table 19 on page 105 lists the types of M2000 Series Meridian Digital Telephones for NTZK telephones and Table 4 on page 106 lists the types for NT2K telephones. They show when additional power is needed to operate the telephone or its optional hardware. Power Supply Boards come installed in factory-assembled configurations that require additional power.

> ***Note 1:*** If a power failure occurs, configurations that require loop power continue to work only if the system has battery backup. Only those options that require additional power cease to function.
>
> ***Note 2:*** During a power failure, the carbon agent headset on the M2216ACD-2 fails and the electret supervisor's jack can be used as an agent jack. If no headset is plugged in to the electret jack during power failure, the call is dropped, and the agent is logged off and must log in again once the electret headset is plugged in. When power is restored, the carbon jack returns automatically.

Power supply board

The power supply option consists of a power supply board that mounts inside the telephone, coupled with an external wall-mount transformer or closet power supply that provides power to the power supply board. The power supply board receives its power through pins 1 and 6 of the line cord.

When installing an MCA or MPDA to NTZK or NT2K phone sets with a date code prior to January 1998, a Power Option board is required, along with an additional power source.

When installing an MCA in an NT9K phone set or an NT2K with date code of January 1998, install only the MCA (an additional Power Option board and Jumper board are not required).

The power supply board connects to the telephone through a 14-pin bottom entry connector.

Table 19
NTZK model Power requirements, M2000 Series Meridian Digital Telephone sets

Telephone type	Loop power	Additional power (Power Supply Board)
M2006	Basic configuration	MPDA, External Alerter Interface, MCA (optional),
M2008	Basic configuration	Any option(s)
M2616	Basic configuration (with Handsfree) and Display.	MPDA, Key Expansion Module, External Alerter Interface, MCA (optional)
M2016S	N/A	Basic Configuration
M2216ACD-1	Basic configuration (with Display)	MPDA, Key Expansion Module, External Alerter Interface, MCA (optional)
M2216ACD-2	N/A	Any configuration

Refer to Table 19 and Table 20 on page 106 for power supply board requirements.

Local plug-in transformer (A0367335)

A single winding transformer equipped with a 10 ft. (3 m) cord of 22 AWG two-conductor stranded and twisted wire with a modular RJ-11 duplex

Table 20
NT2K model Power requirements, M2000 Series Meridian Digital Telephone sets

Telephone type	Loop power	Additional power (Power Supply Board and Transformer)
M2006	Basic configuration	Any option(s)* (MPDA, External Alerter Interface, MCA)
M2008/M2008HF	Basic and Display configurations	MPDA, External Alerter Interface
M2616	Basic, Display, and Handsfree configurations and Key Expansion Module(s)	MCA, MPDA, External Alerter Interface, MCA
M2016S	N/A	Basic configuration
M2216ACD	Basic configurations (with Display) Key Expansion Module(s).	MPDA, Key Expansion Module, External Alerter Interface, MCA
*No display can be added to the M2006 set.		

adapter can provide the additional power needed to operate the telephone and its options. See Figure 23 on page 107.

CAUTION
Damage to Equipment
Do not plug any equipment (computer, modem, or LAN card) other than the M2000 Series Meridian Digital Telephone into the RJ-11 transformer adapter, as damage to equipment can result.

Figure 23
Configuration of local plug-in transformer

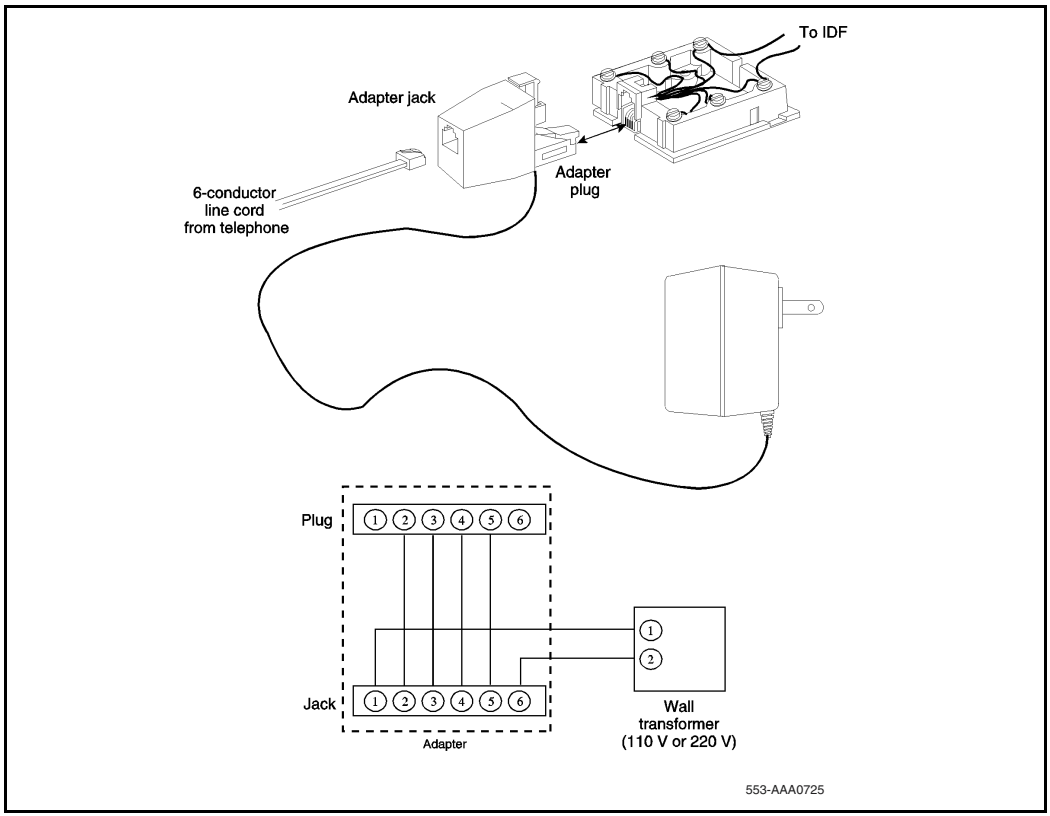

120 V transformer (AO367335 or equivalent)
The following minimum specifications must be met by this transformer:

Input voltage	120 V ac/60 Hz
No load output voltage	29 V ac maximum
Voltage at rated current	26.7 V ac minimum
Rated load current	700 mA

240 V transformer (AO367914 or equivalent)
The following minimum specifications must be met by this transformer:

Input voltage	240 V ac/50 Hz
No load output voltage	29 V ac maximum
Voltage at rated current	26.7 V ac minimum
Rated load current	700 mA

Note 1: The telephone cannot be wall-mounted over the wall jack when using a transformer, because of the size of the RJ-11 adapter. Hang the telephone above or to the side of the jack and run the line and power cords to it.

Note 2: The above-mentioned transformers can also used with outlets identified as 110V or 220V.

Closet Power Supply

Closet power can be obtained from an ac transformer for loops of 100 ft. (30 m) or less, or a dc transformer for loop lengths of 650 ft. (198 m) or less. An equivalent power source can be used but must be UL listed to provide isolation of outputs to the terminal. See Figure 24 on page 109.

CAUTION
Damage to Equipment
When using closet power, do not plug the modular connector into any equipment (computer, modem, or LAN card) other than the M2000 Series Meridian Digital Telephone, as damage to equipment can result.

Note 1: All terminals must be isolated from the input winding and each terminal must be isolated from all other terminal windings. A separate winding is required for each terminal, and grounds should not be connected.

Note 2: The QUT1 closet power supply source is not compatible with M2000 Series Meridian Digital Telephones.

The AC source should be rated at 29 V ac, 700 mA isolated. The dc source should be rated at 42 V dc, 300 mA isolated, with current limiting output of 1 amp.

Figure 24
Closet Power Supply configuration

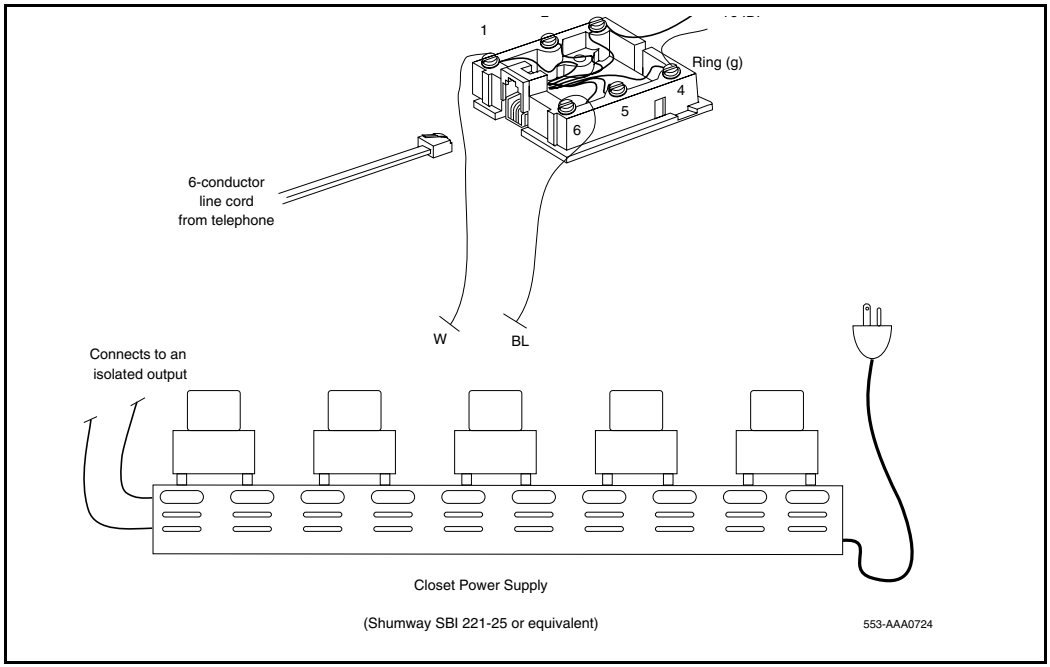

Handsets

This section provides ordering information for M2000 Series Meridian Digital Telephone handsets.

Table 21
Order codes for new handsets for M2000 Series Meridian Digital Telephone sets, model NTZK

Description	Order Code
Legacy handset, Black	NT0C09EA03
Legacy handset, Ash	NT0C09EA35
Legacy handset, Gray	NT0C09EA93
Note: Handsets designed for NT2K sets (Global handset) do not meet product transmission/reception specifications if used with NTZK sets.	

Table 22
Order codes for new handsets for M2000 Series Meridian Digital Telephone sets, model NT2K

Description	Order Code
Global handset, Black	NT0C09EK03 / A0400786
Global handset, Ash	NT0C09EK35 / A0400787
Global handset, Gray	NT0C09EK93 / A0400790
Note 1: Handsets designed for NTZK sets (Legacy handset) do not meet product transmission/reception specifications if used with NT2K sets. ***Note 2:*** Noisy Location, Push-to-Talk, Push-to-Mute, and Mercury Switch handsets do not meet product transmission/reception specifications if used with NT2K sets. ***Note 3:*** Global handsets are not compatible with M1250 or M2250 (AE or current AF versions) telephones.	

Ordering information

Refer to the Nortel Networks price book, or contact your Nortel Networks representative for specific ordering codes.

Table 17 on page 95 lists the hardware options that can be purchased separately.

For ordering configurations for M2000 Series Meridian Digital Telephones and accessories, see the current price book.

See *Equipment Identification* (553-3001-154) for more information.

M2000 add-on modules

Contents

This section contains information on the following topics:

Packing and unpacking

Use proper care when unpacking any add-on module. Check for damaged containers so that appropriate claims can be made to the transport company for items damaged in transit.

If a module must be returned to the factory, pack it in the appropriate container to avoid damage during transit. Remember to include all loose parts in the shipment.

There are three distinct versions of M2000 Series Meridian Digital Telephones – all three are supported. The versions can be clearly distinguished by the first four letters in the upper left-hand corner of the model identification label on the bottom of the telephone.

The three versions are as follows:

- the “NTZK” models
- the “NT2K” models with date code prior to April 24, 1998
- the third version includes both the “NT9K” models and the “NT2K” models with date code of April 24, 1998 and later

  In addition, the two jacks face in the same direction on “NT2K” and “NT9K” telephones, and in opposite directions on “NTZK” telephones. When appropriate, differences between the models are noted in this document.

Busy Lamp Field/Console Graphics Module

The Busy Lamp Field/Console Graphics Module (BLF/CGM) can be added to an M1250 or M2250 attendant console.

The BLF/CGM can do the following:

- display the status (busy or idle) of up to 150 consecutive extensions within the Succession 1000M, Succession 1000, and Meridian 1 Standard Busy Lamp Field (SBLF)
- display the status (busy or idle) of any hundreds group of DNs within the system Enhanced Busy Lamp Field (EBLF)
- display which attendant console is the supervisory console and which consoles are active
- display supplementary information about individual extensions, such as the reason the person is away (business, vacation, or illness), when the person is due to return, and an alternate extension where calls to the person should be directed
- display a company logo
- display graphics
- display text in any one of eight languages
- have its screen contrast adjusted for easy viewing

Installation

The BLF/CGM mounts on the back of the attendant console and is held on by snapfits and screws. It is connected to the console using a 16-way connector that is located on the keyboard Printed Circuit Board (PCB). This connector is accessed through a rectangular knockout section located underneath the casing overhang at the Meridian logo location. See Figure 25 on page 117, and subsequent figures.

Power requirements

The BLF/CGM obtains its power through the attendant console.

To provide backlighting for the BLF/CGM display, an external floating 16 V dc (300 mA) power supply (A0367601) must be cabled in at the local Main Distribution Frame (MDF) at a maximum of 35 m (115 ft) from the attendant console.

Display backlight power supply option

An optional 16 V dc power supply (A0367601) can be installed to the MDF to improve the display backlight brightness.

The Busy Lamp Field/Console Graphics Module (BLF/CGM) obtains its power through the attendant console. See Figure 25 on page 117. The requirements are as follows:

- a reference ground line (0 V)
- power source of 5 V for the CMOS electronics that control the Lamp Field Array module (c. 50 mA)
- power source of –12 V for the display of the Console Graphics Module (c. 10 mA)
- backlighting power

An external floating 16 V dc (300 mA) power supply is required to be cabled in at the local Main Distribution Frame (MDF) at a maximum of 120 ft (36 m) from the attendant console when the BLF/CGM is installed (A0367601 –

Transformer). This provides all the power requirements for the M2250 applications.

The BLF/CGM has a battery that provides backup power to maintain the Supplementary Information when the console is powered down. The battery lifetime is 5 years. To replace the battery, return the BLF/CGM to the supplier.

The BLF/CGM mounts on the back of the attendant console and is held on with snapfits and two screws.

The attendant console's top cover must be removed to install the BLF/CGM.

Refer to the *M1250/M2250 Attendant Console User Guide* or the *Busy Lamp Field/Console Graphics Module User Guide* for further information. Refer to "M1250 and M2250 Attendant Consoles" on page 205 for a description of M2250 attendant consoles equipped with a BLF/CGM.

CAUTION WITH ESDS DEVICES

Follow normal anti-static precautions when installing the BLF/CGM onto the attendant console.

Figure 25
The Busy Lamp Field/Console Graphics Module on the M2250 attendant console

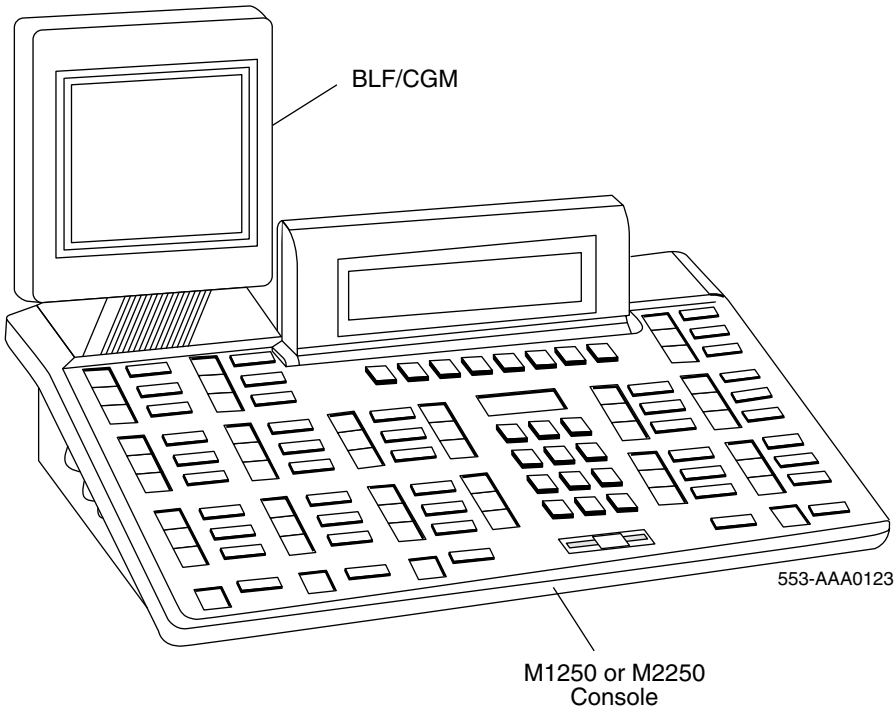

Connect the Busy Lamp Field/Console Graphics Module to the M2250 attendant module

Follow the steps in Procedure 17 to connect the Busy Lamp Field/Console Graphics Module to the M2250 attendant console.

Procedure 17
Connecting the BLF/CGM to the M2250 attendant console

1 Disconnect the main power/system cable from the rear of the attendant console, and remove the handset jack plug from the side.

2 Move the adjustable display to the down position to protect it from damage while installing the Busy Lamp Field/Console Graphics Module (BLF/CGM). Move the volume slider switch to the far left. See Figure 26.

Figure 26
Volume slider position

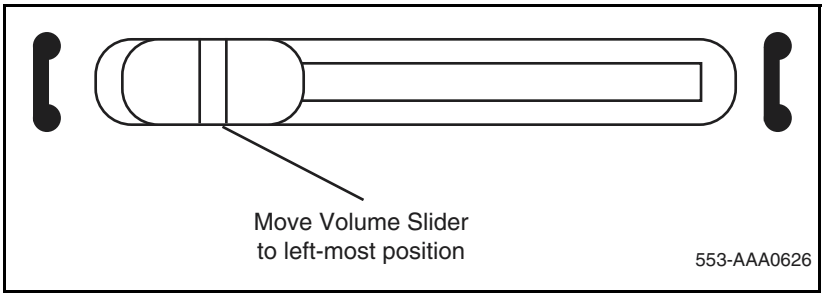

3 Place the attendant console facedown on a properly prepared work surface, taking care to avoid scratching or damaging the top cover or display. Remove the adjustable stand, if required.

The stand is secured with four screws. Remove the stand as a complete assembly, and set aside.

4 Remove the 12 fastening screws in the base of the attendant console that secure the top cover to the console base. See Figure 27 on page 119. Holding the console base and cover firmly, turn it over so that the top cover is on, facing up.

Figure 27
Removing the fastening screws

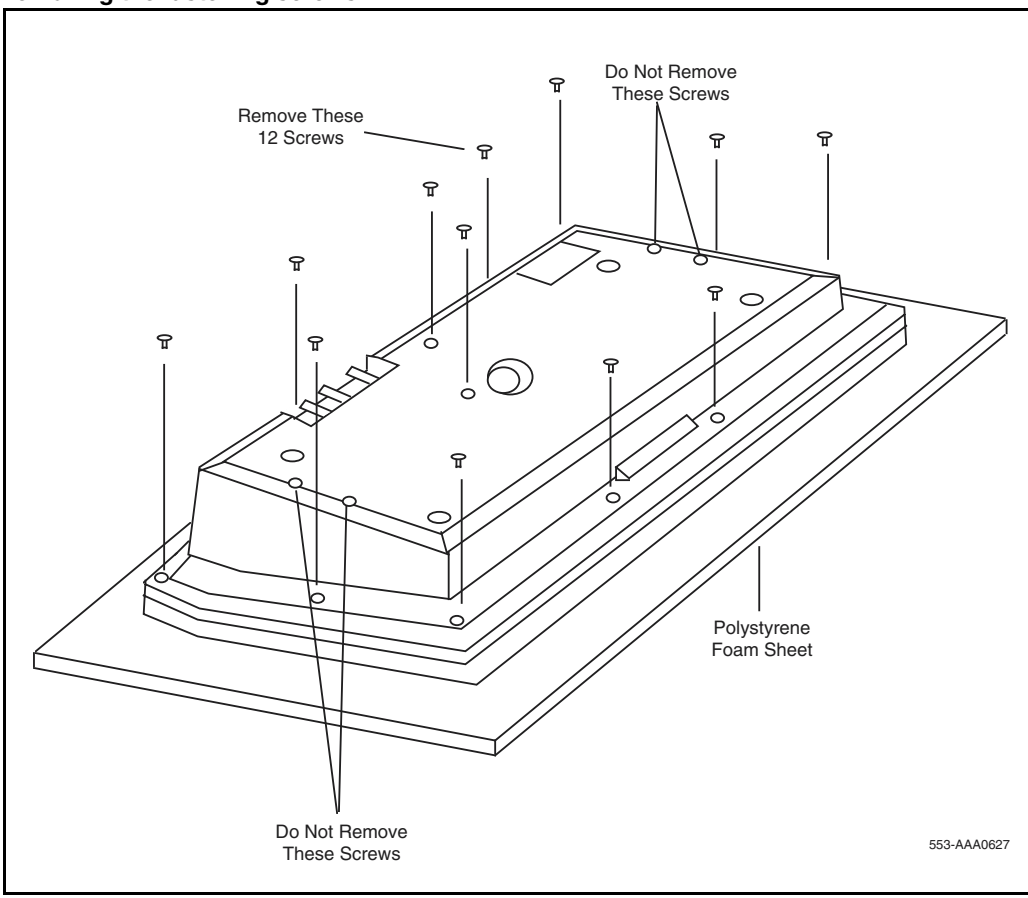

5 Raise and hold the top cover to remove the single cable connector only. The alerter cable does not need to be removed. See Figure 28 on page 120.

6 Remove the top cover and place it upside down to the left of the attendant console.

Figure 28
Removing the top cover

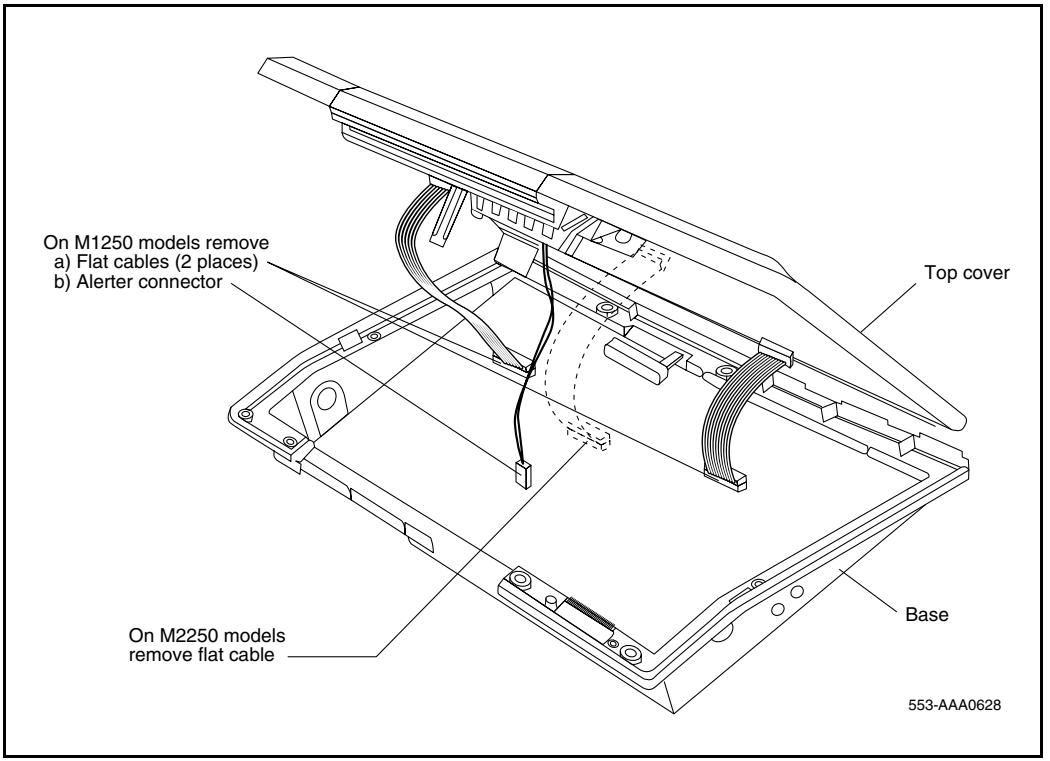

7 Remove the knockout section on the back of the attendant console (see Figure 29 on page 121) with a small screwdriver or similar tool. Remove any remnants of the breakaway tags.

8 Feed the flat ribbon cable for the Busy Lamp Field/Console Graphics Module (BLF/CGM) through the knockout hole in the base of the attendant console.

9 Hold the BLF/CGM unit over the console in a vertical position, ensuring that the two locators on the bottom bracket of the BLF/CGM are located in the knockout hole.

Figure 29
Attendant console knockout section

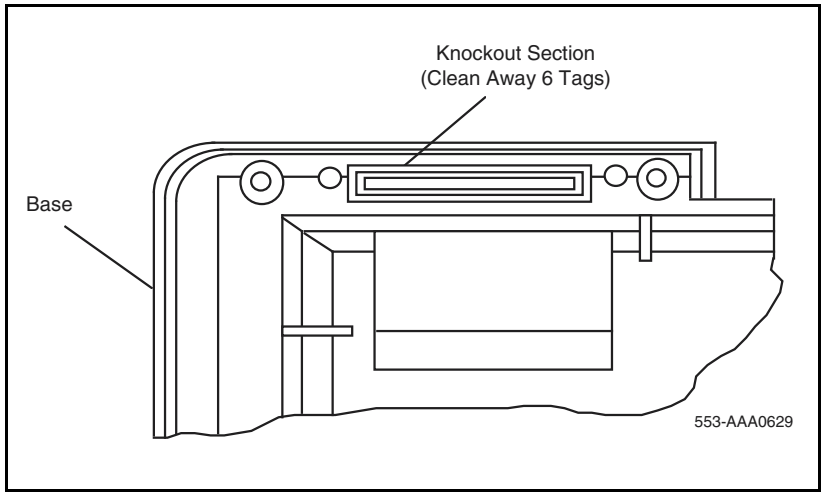

10 Push down on the attendant console, while holding the BLF/CGM unit, until the two locators snap into place. See Figure 30 on page 122.

11 Fit the BLF/CGM ribbon cable onto the top cover circuit board, into the flexible strip connector J4 (so that the blue line on the cable faces away from the circuit board).

12 Hold the top cover over the attendant console and reconnect the cable connector(s) onto the base of the attendant console.

13 Place the top cover on the console. Slide it back and down into place. See Figure 32 on page 124. Check that all the cables are in the correct positions and that none are trapped.

14 Push the BLF/CGM display into position by rotating it back (see Figure 32).

15 Ensuring that the volume slider is fully engaged in the correct slider, hold the top cover and console base firmly together. Turn the assembly upside down. See Figure 33 on page 125.

16 Reinsert the 12 screws that secure the top cover to the console base and tighten.

17 Insert the two new screws supplied with the BLF/CGM that attach it to the base, and tighten. See Figure 33 on page 125.

Figure 30
Connecting the BLF/CGM to the attendant console

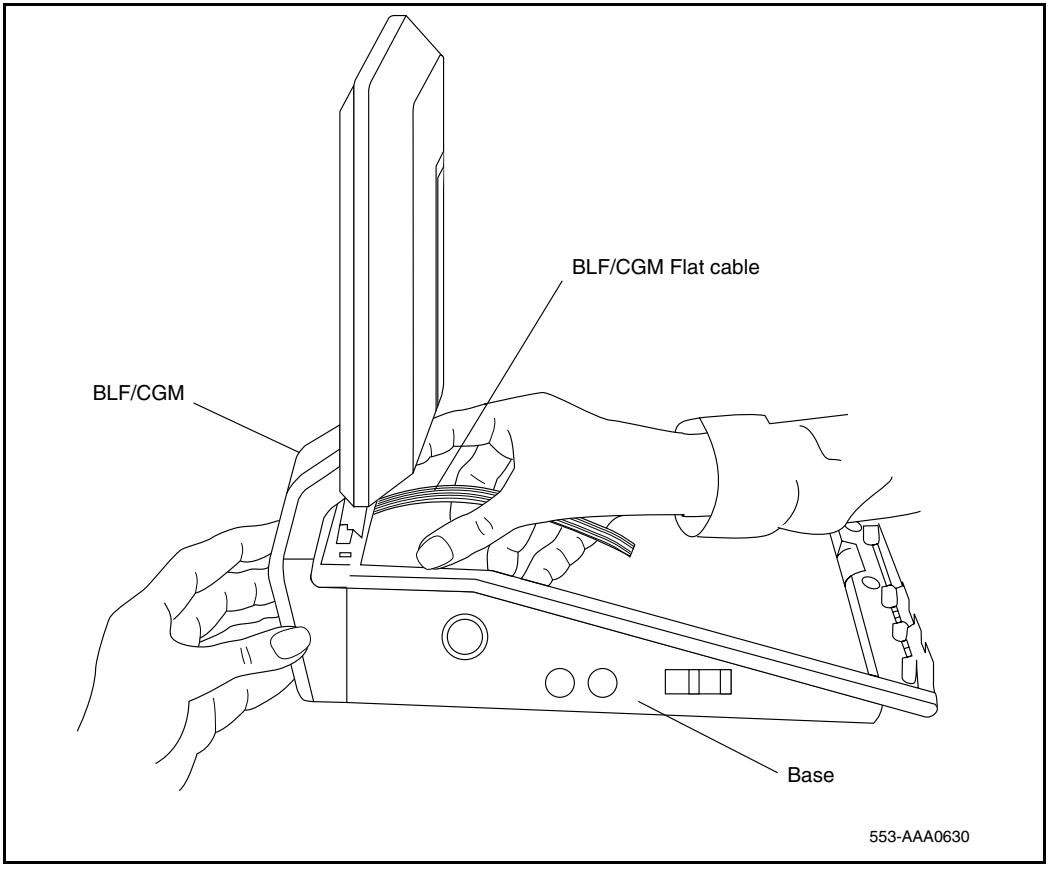

18 Cable in BLF power at the local Main Distribution Frame (MDF) as per M2250 cross-connections.

19 If required, replace the adjustable stand.

20 Reconnect the main system cable to the rear of the console.

21 If the BLF/CGM has been correctly installed, the main menu appears when power is supplied to the attendant console. Test the BLF/CGM by selecting a menu option. Refer to *Busy Lamp Field/Console Graphics Module User Guide* for programming information.

22 Define the Busy Lamp Field in the system database. Refer to *Features and Services* (553-3001-306).

23 Test the Busy Lamp Field features using *M1250/M2250 Attendant Console User Guide*.

Figure 31
Support spacer

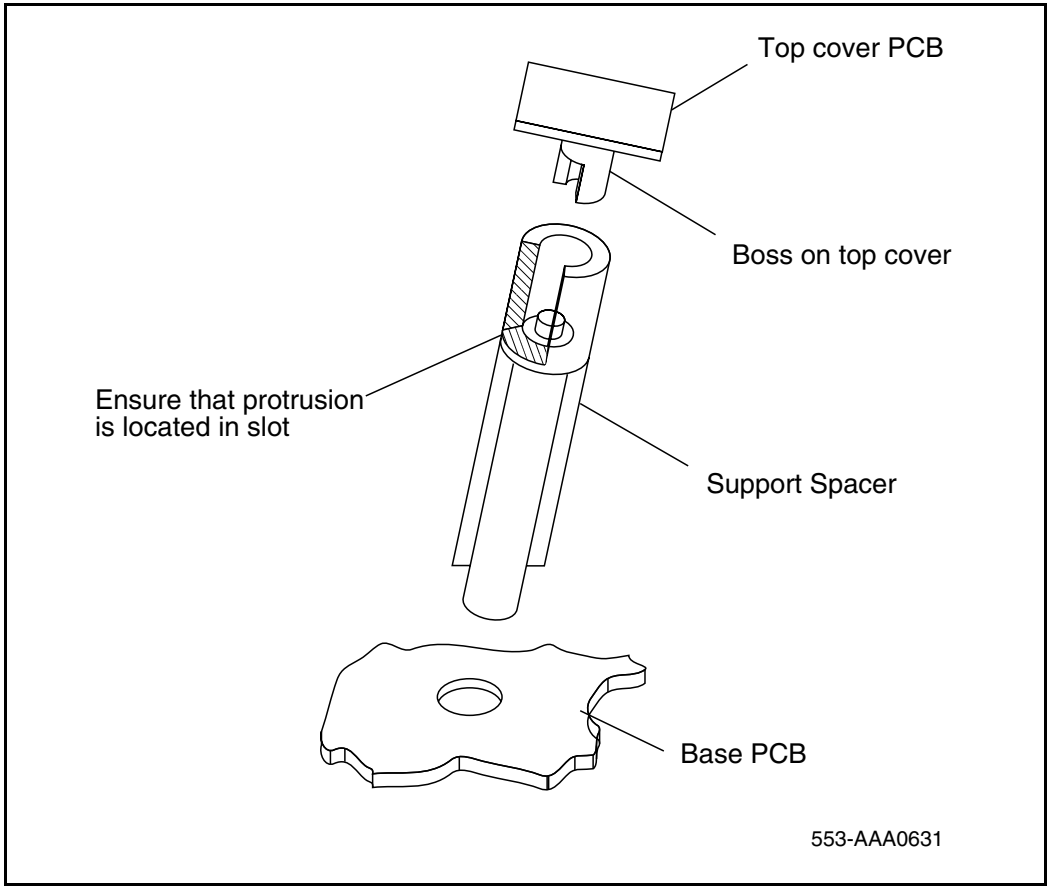

End of Procedure

Figure 32
Positioning the top cover and the BLF/CGM

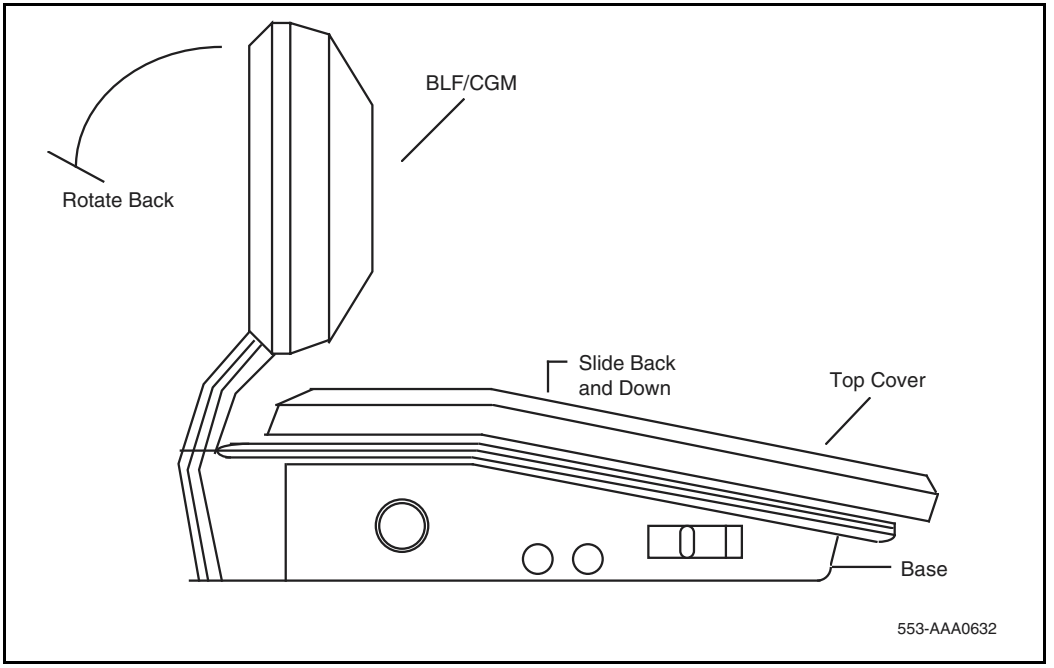

Procedure 18
Removing the Busy Lamp Field/Console Graphics Module

1 Disconnect the main power/system cable from the rear of the attendant console, and remove the handset jack plug from the side.

2 Move the adjustable display to the down position to protect it from damage while removing the BLF/CGM. Also move the volume slider switch to the far left (see Figure 26 on page 118).

3 Place the attendant console facedown on a properly prepared work surface, taking care to avoid scratching or damaging the top cover or display. Remove the adjustable stand, if required.

The stand is secured with four screws. Remove the stand as a complete assembly, and set it aside.

Figure 33
Attaching the top cover to the attendant console base and BLF/CGM

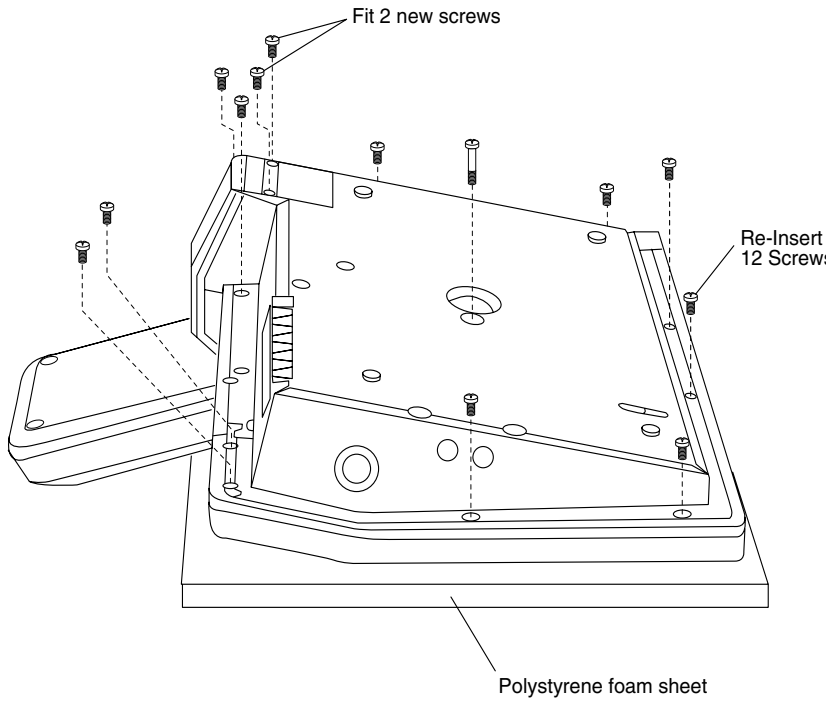

4 Remove the 12 fastening screws in the base of the attendant console that secure the top cover to the console base. See Figure 27 on page 119.

Remove the two screws securing the BLF/CGM to the base of the attendant console.

5 Holding the console base and cover firmly, turn it back over so that the top cover is on, facing up.

6 Raise and hold the top cover to remove the single cable connector only. The alerter cable does not need to be removed (see Figure 28 on page 120).

7 Unplug the BLF/CGM ribbon cable from the attendant console.

8 Remove the top cover and place it upside down to the left of the attendant console.

9 Pull back the snap-fits on the BLF/CGM to disengage the BLF/CGM from the attendant console.

10 Place the top cover on the console. Slide it back and down into place (see Figure 32 on page 124). Reconnect all cables in the correct positions, and make sure that none are trapped.

11 Ensuring that the volume slider is fully engaged in the correct slider, hold the top cover and console base firmly together. Turn the assembly upside down (see Figure 33 page 125).

12 Reinsert the 12 screws that secure the top cover to the console base and tighten.

13 If required, replace the adjustable stand.

14 Reconnect the main system cable to the rear of the console.

End of Procedure

Procedure 19
Checking the functionality of the Busy Lamp Field/Console Graphics Module

Use this procedure to check the functionality of the Busy Lamp Field/Console Graphics Module. Once in this menu, the dial pad is in CGM mode. When any dial pad keys are pressed, except the pound (#) key, the keys are echoed on the BLF/CGM Module.

1 From Diagnostics menu 1, press “5.”

2 Press keys 0 through 9 and the asterisk (*) on the dial pad. Check the CGM to see that they are echoed.

3 Press the pound (#) to exit and return to Diagnostics menu 1.

End of Procedure

For more on the features and operation of the BLF/CGM, refer to the *Busy Lamp Field/Console Graphics Module User Guide*.

Attendant Supervisory Module (M2250 console)

The M2250 digital attendant console needs the Attendant Supervisory Module (ASM) to allow supervision. The M2250 cannot be connected to a QPC297 Attendant Console Monitor circuit card. With the ASM installed, the M2250 attendant console can be supervised just like any other attendant console. An M2250 attendant console configured as a supervisor does not need the ASM installed.

To accept the ASM, the minimum vintage M2250 attendant console is M2250AD. To fully support the ASM, the minimum vintage BLF/CGM is AB. The third PWR TN must be programmed and wired out to support the ASM. See Figure 68 on page 238.

Procedure 20
Installing an Attendant Supervisory Module in an M2250 attendant console

CAUTION WITH ESDS DEVICES
Damage to Equipment
Before handling internal set components, discharge static electricity from hands and tools by touching any grounded metal surface or conductor.

1. Disconnect the main power/system cable from the rear of the attendant console, and remove the handset jack plug from the side.
2. Move the adjustable display to the down position to protect it from damage while installing the ASM. Move the volume slider switch to the left-most position.
3. Place the attendant console facedown on a properly prepared work surface, taking care to avoid scratching or damaging the top cover or display. Remove the adjustable stand, if equipped.

   The stand is secured with four screws. Loosen the screws and remove the stand as a complete assembly, and set aside.
4. Remove the 12 fastening screws in the base of the attendant console that secure the top cover to the console base (see Figure 27 on page 119). Holding the console base and cover firmly, turn it back over so that the top cover is on, facing up.

5 Raise and hold the top cover to remove the single cable connector. The alerter cable does not need to be removed (see Figure 28 on page 120). Remove the top cover and place it upside down to the left of the attendant console.

6 The attendant console's main PCB has holes located in the upper right-hand side, near grid positions D1, D5, and A5. See Figure 34 on page 129. Insert one standoff in each of the holes, twisting it until it is secure.

CAUTION
Damage to Equipment
Once a standoff is inserted, it cannot be removed. Be sure to place each standoff in the correct hole on the main PCB, as shown in Figure 34 on page 129.

7 Position the ASM board over the J3 connector on the console's main PCB. Align the holes on the ASM board with the standoffs and carefully work the ASM pin connector onto connector J3 until firmly seated. See Figure 34 on page 129.

8 Hold the top cover over the attendant console and reconnect the cable connector onto the base of the console.

9 Place the top cover on the console. Slide it back and down into place. Check that all the cables are in the correct positions, and that none are trapped.

10 Ensure that the volume switch is fully engaged in the correct slider. Hold the top cover and console base firmly together. Turn the assembly upside down.

11 Reinsert the 12 screws that secure the top cover to the console base and tighten.

12 If required, replace the adjustable stand.

13 Reconnect the main system cable to the rear of the console.

14 Test the supervisory console feature to make sure you can now properly supervise the M2250 attendant console. Refer to *M1250/M2250 Attendant Console User Guide*.

End of Procedure

Figure 34
Identifying the correct grid positions on the main PCB and attaching the ASM

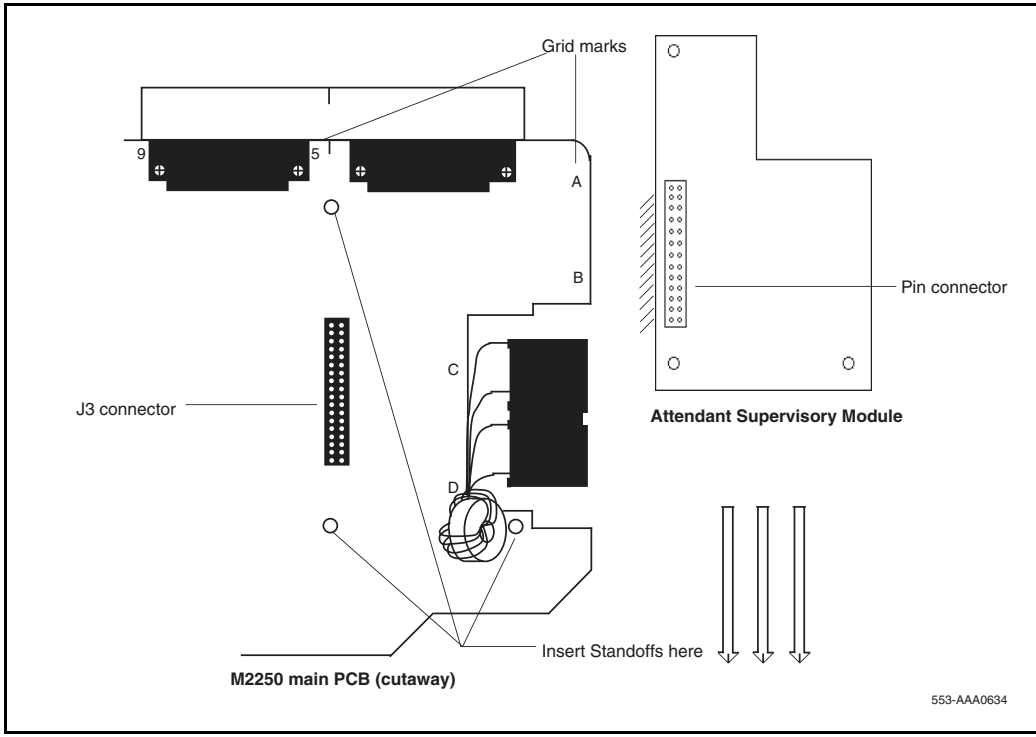

M2317 Data Option

If an existing digital telephone was not originally equipped with the Data Option, or if the existing Data Option has become defective, that option can be added or replaced. The following procedure explains how to install the Data Option for the M2317 telephone.

CAUTION WITH ESDS DEVICES
CMOS devices inside the telephone can be damaged by electrostatic discharge. Before opening any M2317 telephone, discharge your hands and tools by touching any grounded metal surface or conductor.

Procedure 21
Installing the M2317 data option

1. Remove the handset, and place the telephone upside down on a level workplace (a desktop, for example).
2. Disconnect all cords from the telephone.
3. Loosen and remove five screws in the base of the telephone, lifting the base upward.
4. If the telephone is not equipped with the ADO, proceed with step 5.

   If the telephone is equipped with a defective ADO, carefully disconnect the ribbon cable connector from the header connector in the digital printed circuit board. Loosen and remove the two self-tapping screws that fasten the ADO to the telephone base and remove the defective ADO. Proceed with step 6. See Figure 35 on page 132.
5. Remove the breakout section in the rear of the telephone base by tapping it with the handle of a small screwdriver.
6. Place the black plastic connector shroud over the RS-232-C interface connector.

   Note: It is not possible to install the shroud after the board has been inserted in the telephone base.
7. Tip the circuit board up and insert it, connector end first, under the tabs in the base. Position it over the molded locating pins; then lower the board completely into position in the telephone base. Use the three slotted, self-tapping screws supplied with the board and install them through the mounting holes. Tighten the screws.

8 Plug the ribbon cable connector into the header connector, located on the existing circuit board of the telephone (mounted on the faceplate assembly). There is only one such connector on the telephone's circuit board. Make sure the connector is snug.

9 Reassemble the telephone by placing the base section on the faceplate section. Reinstall the five screws.

10 Tighten the screws, reconnect all cords, and place the telephone in its former position.

11 Refer to Procedure 22 to connect the power supply and data terminal to the ADO.

End of Procedure

Procedure 22
Installing the M2317 data terminal

1 Connect the RS-232-C interface connector from the data terminal to the matching header connector in the back of the telephone. See Figure 35 on page 132.

2 Insert the two captive screws in the connector body into the threaded holes in the header connector. Secure them tightly to prevent accidental disconnection during data terminal operation.

3 Insert the keyed power supply plug securely into the 5-pin power connector located to the right of the RS-232-C connector.

4 Plug the wall transformer into the nearest ac outlet. The data terminal is now operational.

Note 1: If an ADM3, ADM5, or ADM11 terminal is used in conjunction with the RS-232-C connector in the Asynchronous Data Option, pin 22 in the RS-232-C cable must be disconnected. These ADM terminals will go into test mode if this pin is not disconnected.

Note 2: A special 9-pin connector is required to connect the Apple Macintosh to the RS-232-C connector in the M2000 Asynchronous Data Option. The connections are shown in Table 23 on page 132.

End of Procedure

Figure 35
M2317 data terminal and Data Option power supply connection

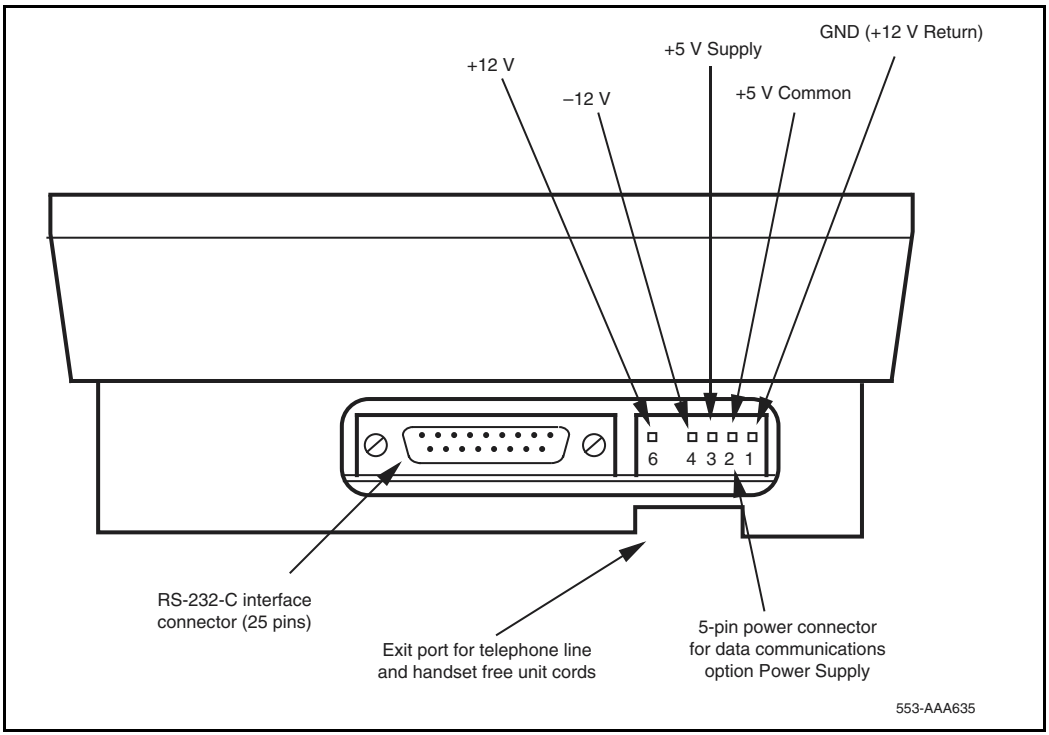

Table 23
Connections for the Apple Macintosh to the M2317 Asynchronous Data Option (ADO)

9-pin connector (from terminal)		25-pin (RS-232-C) connector (at ADO port)
Pin 3	to	Pin 7
Pin 5	to	Pin 2
Pin 9	to	Pin 3
Note: Strap pins 4 and 5 and pins 6, 8, and 20 together.		

Table 24
RS-232-C signals and associated pin numbers for M2317 telephones

Circuit designation			Pin number	Signal source		
EIA	Common	CCITT		DTE	DCE	Name
AA		101	1		X	Frame ground
BA	TXD	103	2	X		Transmit data
BB	RXD	104	3		X	Receive data
CA	RTS	105	4	X		Request to send
CB	CTS	106	5		X	Clear to send
CC	DSR	107	6		X	Data set ready
AB	GND	102	7	X		Signal ground
CD	DTR	108.2	20	X		Data terminal ready
CE	RI	125	22		X	Ring indicator

M2000 Series Meridian Digital Telephones

Use the procedures in this section for adding hardware options to the M2006, M2008/M2008HF, M2016S, M2616, and M2216ACD sets only.

CAUTION
Damage to Equipment
Use only the line cord provided with the M2000 Series Meridian Digital Telephone when installing and removing options. The acceptable line cord is A0346862.

Figure 36 on page 135 shows an exploded view for reference when dismantling the telephone to get to its internal components. Some telephone types are slightly smaller than the M2616 and do not have the center screw in the base, but otherwise they are the same. The center screw may not be required.

Refer to Figure 40 on page 151 to locate the various components of the M2006 and M2008/M2008HF telephones. Refer to Figure 41 on page 152 to locate components on the M2616, M2016S, and M2216ACD telephones.

Figure 36
Exploded view of the M2616/M2016S/M2216ACD telephone

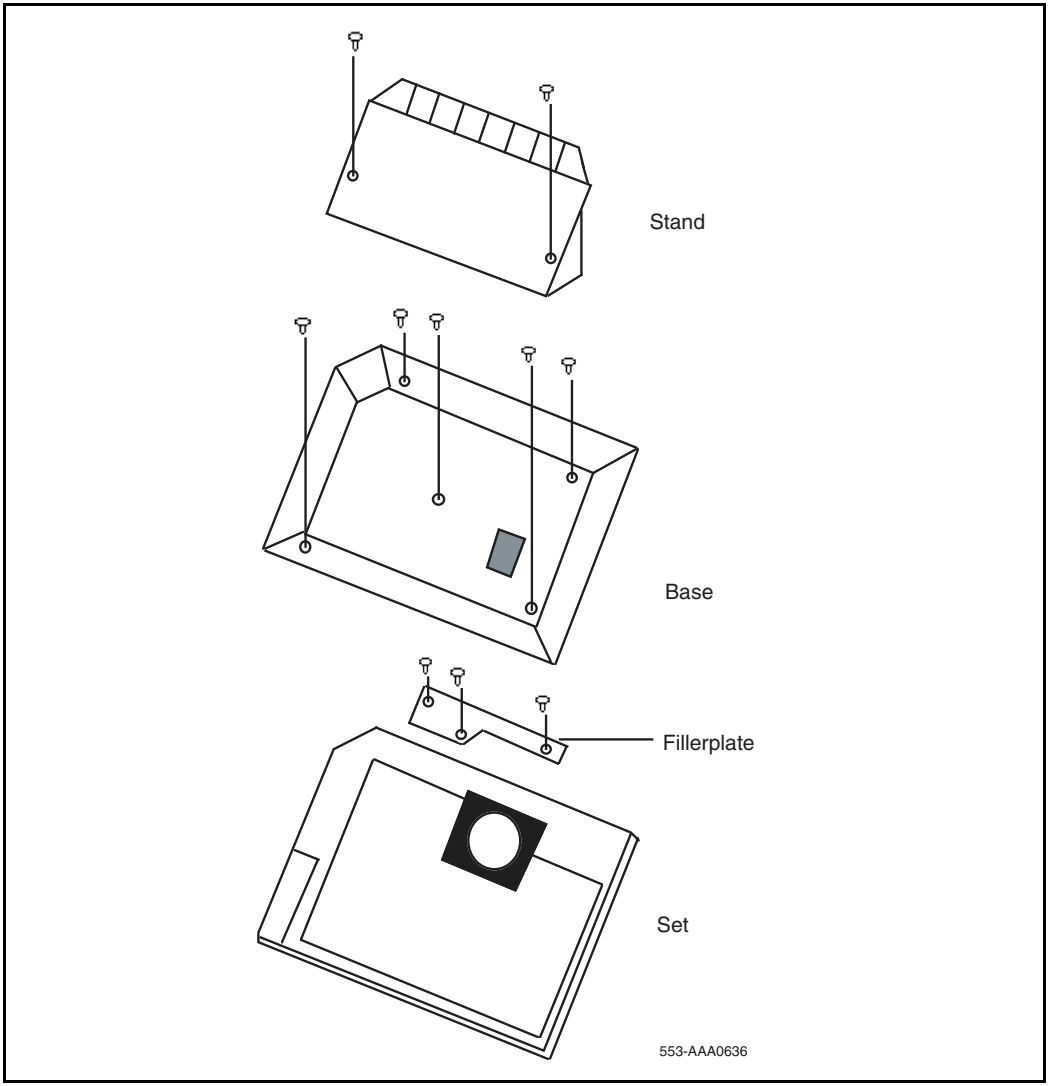

Analog Terminal Adapter

The Analog Terminal Adapter (ATA) enables the use of an off-the-shelf analog device (FAX, Modem, Telephone) to operate simultaneously with the Meridian Digital Telephone set. The Analog Terminal Adapter board fits into the footstand space of the Meridian Digital Telephone set.

Functional description

The Analog Terminal Adapter is mounted in the footstand of the Meridian Digital Telephone set. The ATA requires a separate ac adapter that provides a 24 V ac external power source. The ATA does not draw power from the Meridian Digital Telephone set.

The Analog Terminal Adapter (ATA) provides a RJ11 connection for analog equipment to operate on the same line as the Meridian Digital Telephone set. The Analog Terminal Adapter enables data to be transmitted and received using the public switched telephone network (PSTN). The ATA supports an analog device link to a desktop or laptop computer (with modems) in the digital telephone environment. Currently, it is necessary to install a separate analog phone line to be able to interface with the PSTN.

The ATA can be used for the following analog devices:

- FAX Machine
- Modem
- Analog Telephone

ATA operating parameters

The ATA data parameters are stored locally, although the configuration is set in the Succession 1000M, Succession 1000, and Meridian 1 system. Do not set data parameters in the system before installing the ATA in the telephone. If the parameters are set before the telephone is installed, the configuration information is lost.

Simultaneous voice and data capabilities are available. When the ATA is installed, the System Administrator must activate the Flexible Voice and Data feature by configuring LD 11. See *Software Input/Output: Administration* (553-3001-311) for prompt and response details.

The ATA is capable of receiving dial pulse or DTMF address signaling from the analog equipment.

The ATA uses the 2nd channel of the TCM loop to add an analog port to the digital terminal. It has an RJ11 type jack accessible from the back of the telset.

The analog interface of the ATA is a 2-wire source, providing A and B leads (tip and ring) across which analog equipment (modem/fax) is connected. The loop length is >100 feet. The analog interface of the ATA is compatible with the port types listed in Table 25.

Table 25
Port types compatible with ATA

Country	Port Type(s)	Defining Standard(s)
United States	ONS Station Interface	EIA/Tia-464A
	Class A OPS Station Interface	FCC Rules Part 68
Canada	ONS Station Interface	CAN3-T512.1
	Class 1300 OPS Station Interface	CS-03 Part I

Refer to *Analog Terminal Adapter Quick Reference Card* for detailed information on this feature.

Follow the steps in Procedure 23 on page 138 to add the Analog Terminal Adapter (ATA) to the telephone and to connect it to a FAX or modem. The ATA is supported on Meridian Digital Telephones only.

Procedure 23
Installing and removing the Analog Terminal Adapter

CAUTION WITH ESDS DEVICES
Before handling internal telephone components, discharge static electricity from hands and tools by touching any grounded metal surface or conductor.

1. When the ATA is installed, the System Administrator must activate the Flexible Voice and Data Feature by configuring LD 11.
2. To Activate the Flexible Voice and Data Feature, use the following chart to configure LD 11 (for more detailed information, refer to *Software Input/ Output: Administration* (553-3001-311)).

Table 26:
Flexible Voice and Data feature configuration (Part 1 of 2)

Prompt	Response	Description
REQ:	NEW/CHG	New or change
TYPE:	aaaa	Telephone type, where aaaa = 2006, 2008, 2016, or 2616
TN		Terminal Number where u = 16-31
	lscu	Format for Large System
	cu	Format for Small System and Succession 1000
CLS	FLXA	Flexible voice/data allowed. This Class of service can only be assigned to 2006, 2008, 2016, 2216 or 2617 sets. When configured to CLS=FLXA
	VCE	(FLXD) = Flexible voice/data denied. Voice Class of Service (VCE) can be assigned to the upper TN unit (16-31) and Data class of Service (DTA) can be assigned to the lower TN (0-15). A Single Call Ringing (SCR) key can be designated a Data Mode (DTNK) key.
KEY		Prime Directory Number Key, SCR, SCN, MCR or MCN and xxx.

Table 26:
Flexible Voice and Data feature configuration (Part 2 of 2)

Prompt	Response	Description
-Key	xx SCR yyyy	Single Call Ringing
	xx SCN yyyy	Single Call Non Ringing Data Mode Key, where xx = key number and yyy = Data Directory Number.

3 Disconnect and remove all cords (including the handset cord) from the telephone.

4 Place the telephone, face-down, on a padded level surface.

5 Using a #1 Phillips screw driver, remove both screws and separate the footstand from the phone base.

6 If using the NT9K ATA ready set or the NT2K with date code of April 24, 1998 or later:

- Remove and retain the footstand (this footstand will be reattached back onto the set base after ATA installation is complete.
- Skip to the ATA Installation Procedure 13 on page 142.

7 If using the NT2K or the NTZK phone set, remove and discard the footstand. Use the redesigned footstand required for the installation of the ATA.

8 If an MCA or MPDA installed is installed, unplug it from the data line jack in the phone base.

9 Remove the back covering of the phone base by removing the four screws.

Figure 37
Telephone base and footstand

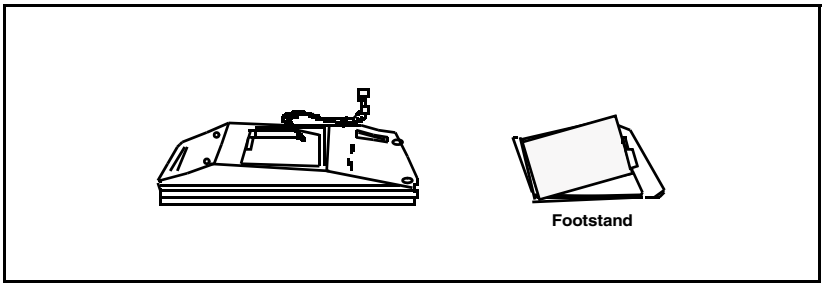

10 If the phone is equipped with a Power Option board and/or cable, you must remove it before installing the ATA. The Power Option board is located on the left side of the telephone:

- Remove the two small screws from the Power Option board (near the top) and set them aside.
- To disconnect the Power Option board from the **NTZK** telephone, grasp the board firmly on each side and slowly rock the Power Option board while applying upward pressure until it is released form the 2X7 pin connector.
- To disconnect the **NT2K** Power Option board from the set simply remove the screws from the Power Option board and base and lift the board out of the set.
- If the Power Option board has a ribbon cable, disconnect the cable from the 2X7pin connector on the main board and remove the cable

Figure 38
Connector view

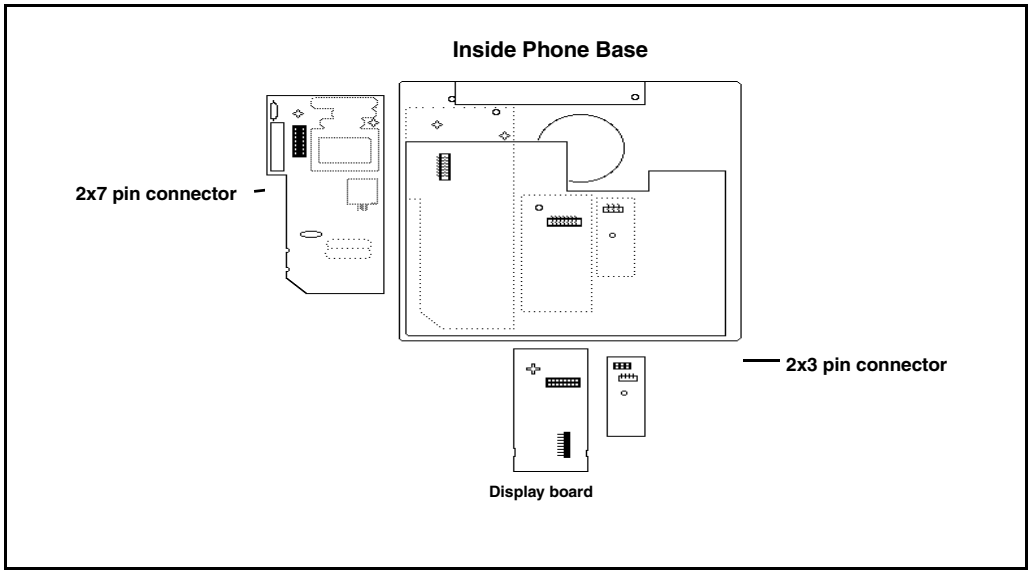

11 If the phone is equipped with the External Alerter Option, remove it before installing the ATA. The External Alerter Option board is located at the right center of the telephone:

- Remove the screws from the External Alerter Option board.
- Grasp the board firmly on each end and pull upward to remove from the 2X3 pin connector

12 Install the Jumper board on the 2X7 pin connector inside the phone set base.

- There are 2 Jumper boards provided. Use the brown Jumper board for the NTZKxxxx phone set and the black Jumper board for the NT2Kxxxx phone set with a date code prior to April 24, 1998.
- If a Power Option board was not installed on the NT2Kxxxx and the NTZKxxxx there will be 2 Jumper plugs on the 2X7 pin connector that must be removed before installing the Jumper board.

13 Remove the knockout located on the back panel of the footstand in order to install the ATA. It is the smaller knockout, located inside the large knockout. The small ATA knockout can be remove by pressing it in with thumb presser.

14 Install the ATA Printed Circuit board into the footstand.

15 Plug the ATA 8-conductor line cord, included in the package, into the data jack in the base of the telephone. Plug the other end of this cord into the data jack of the ATA located in the footstand.

16 Reassemble the footstand on the base and screw it into position using a #1 Phillips screwdriver.

17 Plug the 24v AC Power Transformer into the circular mini DIN connector on the backpanel of the footstand.

18 Plug the transformer end of the AC Power Transformer into the AC commercial electrical outlet.

19 The analog device can now be connected to the RJ11 connector on the back of the footstand. Refer to the manufacturer's documentation for installation instructions for the FAX, modem, or telephone to be used.

End of Procedure

Meridian Communications Adapter and Meridian Programmable Data Adapter

The Meridian Communications Adapter (MCA) mounts within the telephone and allows asynchronous and synchronous ASCII terminals, and personal computers to be connected to the telephone using an RS-232C or V.35 interface on a DB-25 connector. The MCA replaces the Meridian Programmable Data Adapter (MPDA). Data programming can be implemented on the MCA through a service change (LD11) as well as the keypad.

Use the following procedures to add the Meridian Communications Adapter (MCA) or Meridian Programmable Data Adapter (MPDA) to the telephone and to connect it to a terminal or personal computer.

When using the MCA for synchronous data connections, configure the telephone with a display option to view the data parameters. The MPDA and MCA are supported on M2000 Series Meridian Digital Telephones only.

Installing an MCA or MPDA to NTZK or NT2K phone sets with date code prior to April 24, 1998 requires the installation of a Power Option board along with an additional power source.

When installing an MCA in an NT9K phone set, or an NT2K with date code of April 24, 1998 and later, install only the MCA (an additional Power Option board and Jumper board is not required).

- See Procedure 26 on page 149 for M2006/M2008 NTZK sets.
- See Procedure 13 on page 151 for M2616/M2216ACD NTZK sets.
- See Procedure 28 on page 157 for M2006/M2008/M2008HF NT2K sets.
- See Procedure 23 on page 138 for installing an MCA onto an NT9K or NT2K with date code of April 24, 1998 and later.

The MCA can be placed as far from its associated data terminal or computer port as is consistent with EIA RS-232 or V.35.

When the MCA is used as a V.35 interface, an additional cable is required to convert the DB-25 into a 34-pin rectangular connector. This does not apply to asynchronous configurations. If the pins are left in V.35 mode, asynchronous operation is not supported, and the MCA looks as though it is locked up.

Remove the two 14-pin jumper plugs or one 20-pin jumper plug inside the MCA from the RS-232 socket(s) and install the V.35 socket.

> ***Note:*** The female cable ordering code is A0408927. The male cable ordering code is A0408928. The A0300752 and A0300753 cables are still supported, unless used with applications similar to IBM front-end.

Modem pooling is not supported on the MCA.

When a call is connected between two MCAs, and power is removed from one, the MCA does not release until the power is restored.

The MCA always remembers the most recent data parameters. In the case of power failure, data settings do not have to be reset.

See Table 27 for a listing of the V.35 CCITT signals supported by the MCA.

Table 27
V.35 CCITT signals supported by the MCA (Part 1 of 2)

V.35 CCITT	MCA DB-25 pin no.	Abbr.	Adaptor cable		Signal Source		Description
			DB-25 Pin No.	V.35 Pin No.	DTE	MCA	
101	1	DG	1	A			Protective ground*
103A	2	SDA	2	P	X		Transmit data A
104A	3	RDA	3	R		X	Receive data A
105	4	RTS	4	C	X		Request to send
106	5	CTS	5	D		X	Clear to send
107	6	DSR	6	E		X	Data set ready
102	7	S	7	B			Signal ground
109	8	CD	8	F		X	Carrier detect
—	9/10	—	9/10	CC/L			No connection
—	11	—	11	K	X		**
115B	12	SCRB	12	X		X	Serial clock receive B
103B	13	SDB	13	S	X		Transmit data B
114B	14	SCTB	14	AA		X	Serial clock transmit B
114A	15	SCTA	15	Y		X	Serial clock transmit A
104B	16	RDB	16	T		X	Receive data B
115A	17	SCRA	17	V		X	Serial clock receive A
—	18/19	—	18/19	M/HH			No connection
108.2	20	DTR	20	H	X		Data terminal ready

Note: * Pin 1 is connected to the MCDS shelf frame.
** These leads are ignored by the MCA controller.

Table 27
V.35 CCITT signals supported by the MCA (Part 2 of 2)

V.35 CCITT	MCA DB-25 pin no.	Abbr.	Adaptor cable		Signal Source		Description
			DB-25 Pin No.	V.35 Pin No.	DTE	MCA	
—	21	—	21	EE			No connection
125	22	RI	22	J		X	Ring indicator
113B	23	SCTEB	23	W	X		Tran sign elemt time B
113A	24	SCTEA	24	U	X		Tran sign elemt time A
—	25	—	25	MM	X		**

Note: * Pin 1 is connected to the MCDS shelf frame.
** These leads are ignored by the MCA controller.

Procedure 24
Installing and removing the Meridian Communications Adapter or Meridian Programmable Data Adapter

CAUTION WITH ESDS DEVICES
Before handling internal telephone components, discharge static electricity from hands and tools by touching any grounded metal surface or conductor.

If using a NT9K phone or the NT2K with date code of April 24, 1998 and later, it is not necessary to install a Power Option board to operate the MCA.

1 Remove the handset and place the telephone upside down on top of a level, solid work surface (a desktop, for example) covered with soft material or paper to prevent damage to movable keys and the telephone face.

2 Disconnect all cords from the telephone.

3 Remove the footstand.

- For NT2K and NTZK with date code prior to April 24, 1998 remove the two screws from the footstand assembly and unsnap the footstand by pressing inward at the back of the footstand where it meets the base and pull upward. Discard the footstand. The redesigned footstand ordered with the ATA is used instead.
- For NT9K and NT2K with a date code of April 24, 1998 and later, retain the footstand and skip to Procedure 10 on page 147.

4 If the telephone is not equipped with the Meridian Programmable Data Adapter (MPDA) or Meridian Communications Adapter (MCA), go to Procedure 6 on page 146. If replacing an existing MPDA or MCA, carefully disconnect the end of the 8-pin TELADAPT jack plugged into the telephone by pressing firmly on the latch-tab and slowly lifting up.

5 Turn the telephone footstand assembly over and put it in the normal use position. Remove the two self-tapping screws that fasten the MPDA or MCA to the telephone footstand assembly and remove the MPDA or MCA by pulling outward and up. Go to Procedure 11 on page 148 to replace the MPDA or MCA.

6 Remove the back covering of the phone base by removing the four screws.

7 If the NTZK or the NT2K (with date code prior to April 24, 1998) phone set is equipped with a Power Option board and/or cable, the Power Option board and/or cable must be removed before installing the MCA.

- Remove the two small screws from the Power board (near the top) and set them aside.
- To disconnect the Power Option board from the NTZK telephone, grasp the board firmly on each side and slowly rock the board while applying upward pressure, until it is released from the 2X7 pin connector.
- To disconnect the NT2K Power Option board from the set, simply remove the screws from the base and lift the board out of the set.
- If the Power Option board has a ribbon cable disconnect the cable from the 2X7 pin connector on the main board and remove the cable.

8 If the phone is equipped with the External Alerter board, it must be removed before installing the MCA with redesigned footstand.

- The External Alerter board is located at the right center of the telephone.
- Remove the screws form the board, grasp the board firmly on each end and pull upward to remove it from the 2X3 pin connector.

9 Install the Jumper board onto the 2X7 pin connector inside the phone base.

- If the phone set did not have a Power Option board installed on the NT2K or the NTZK then there will be 2 Jumper plugs on the 2X7 connector. Remove them before installing the Jumper board.
- The redesigned footstand will have 2 jumpers. Use the black one for the NT2K phone and the brown one for the NTZK phone.

10 Remove the large MCA knockout section in the rear of the telephone footstand assembly, and remove the small tabs. See Figure 39. It is best to remove this knockout with a screwdriver.

Figure 39
Installing the MCA

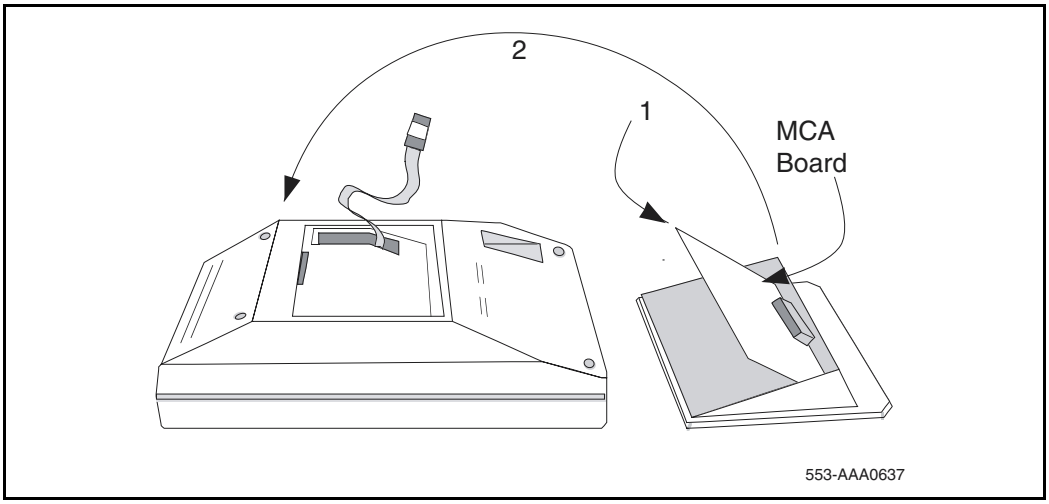

11 For MCA, set option plugs to the required configuration, RS-232 or V.35. The factory default is RS-232.

12 Tilt the MPDA or MCA circuit board up and insert the DB-25 connector socket into the breakout section. Then slide the board connector end-first under the tabs in the footstand assembly and position it over the locating pins. Position and lower it completely onto the telephone footstand assembly. Insert the two self-tapping Phillips-head screws supplied with the MPDA or MCA into the mounting holes and tighten them with a #1 Phillips screwdriver.

13 Plug one end of an 8-conductor line cord supplied with a TELADAPT adapter in the jack J1 of the MPDA or MCA (latch tab facing down) and plug the other end of the line cord into the data jack in the base of the telephone. Make certain the latch tab of each cable end is firmly snapped into place.

14 Carefully route the excess cable so that it will not become pinched between the footstand and base.

15 Reassemble the base and footstand assembly sections, ensuring that the footstand is firmly seated on the base.

16 Tighten the screws

- Reconnect all cords, connect the new 24v AC transformer to the set.
- Plug in the new transformer into the 110v AC commercial electrical outlet.
- Place the telephone in the normal operating position.

Note 1: Place the label supplied with the MPDA or MCA on the outside of the bottom cover of the telephone. This allows proper identification and tracking of the option level of the set.

Note 2: If an ADM3, ADM5, or ADM11 terminal is used in conjunction with the DB-25 connector-C interface connector in the Asynchronous Programmable Data Adapter, pin 22 in the DB-25 connector cable must be disconnected. These ADM terminals will go into test mode if this pin is not disconnected.

End of Procedure

Procedure 25
Connecting the data terminal

1 Connect the DB-25 connector-C interface connector from the data terminal to the matching header connector in the back of the telephone.

2 Insert the two captive screws in the connector body into the threaded holes in the header connector and secure tightly to prevent accidental disconnection during data terminal operation.

End of Procedure

Power Supply Board (NTZK models)

Use the following procedures to add a Power Supply Board to the telephone for connection to a transformer or closet power supply. Use Procedure 26 for the M2006 and M2008. USE Procedure 13 for the M2616, and M2216ACD.

Procedure 26
Installing and removing the M2006/M2008 Power Supply Board on NTZK sets

CAUTION
Damage to Equipment
Connect the optional Power Supply to the M2000 Series Meridian Digital Telephone only. Equipment damage may result from incorrect connections. Both the closet power supply and the transformer are for use with the M2000 Series Meridian Digital Telephone only.

CAUTION WITH ESDS DEVICES
Before handling internal telephone components, discharge static electricity from hands and tools by touching any grounded metal surface or conductor.

1 Remove the handset and place the telephone upside down on top of a level, solid work surface (such as a desktop) covered with soft material or paper to prevent damage to movable keys and the telephone face.

2 Disconnect all cords from the telephone.

3 Remove the two screws from the footstand assembly and unsnap the footstand assembly by pressing inward at the back of the footstand where it meets the base and pulling upward.

4 If the telephone is equipped with a Meridian Programmable Data Adapter (MPDA) or Meridian Communications Adapter (MCA), unplug the data cable from telephone's base jack.

5 Remove the four screws securing the base of the telephone to the top cover. Remove the base and set it aside.

6 If the telephone is equipped with a display, disconnect the display ribbon cable from the display board and move it out of the way.

7 If the telephone is not equipped with the power supply board, remove the jumpers from P1 connector pins on the main board. Go to step 9.

If the telephone is equipped with a power supply board, go to step 8.

8 The power supply board is located on the left side of the telephone. Remove two small screws from the power supply board (near the top) and set them aside. Grasp the board firmly on each side. Work the board loose from the connector by slowly applying upward pressure to alternate sides until released.

If the power supply board is not being replaced, place the jumpers (A0288529) connecting the bottom two sets of pins on the P1 connector.

9 Place the power supply board so that the alignment pin on the telephone fits into Slot A on the board. See Figure 40 on page 151 and Figure 41 on page 152. Align the mounting holes in the board (near the top) over the mounting holes in the telephone and carefully press down so that the H1 connector on the board slides onto the P1 pins.

10 Take the self-tapping Phillips-head screws supplied with the power supply board and install them into the mounting holes. Tighten firmly with a #1 Phillips screwdriver.

11 If the telephone has a display, reconnect the display ribbon cable, routing the cable as described in Procedure 29 on page 162.

Note: Do not allow R5 on the power supply board to become bent during this procedure.

12 Replace the base. If the telephone is equipped with an MPDA or MCA, reconnect the data cable to the base telephone jack and replace the footstand (ensuring that the MPDA or MCA cable does not get pinched between the base and footstand). Make sure the footstand is firmly seated to the base.

Note: Place the label supplied with the power supply board on the outside of the bottom cover of the telephone. This allows proper identification and tracking of the option level of the set.

13 Tighten all screws, reconnect the line cord, and place the telephone in the normal operating position.

Figure 40
M2006/M2008 telephone and option boards

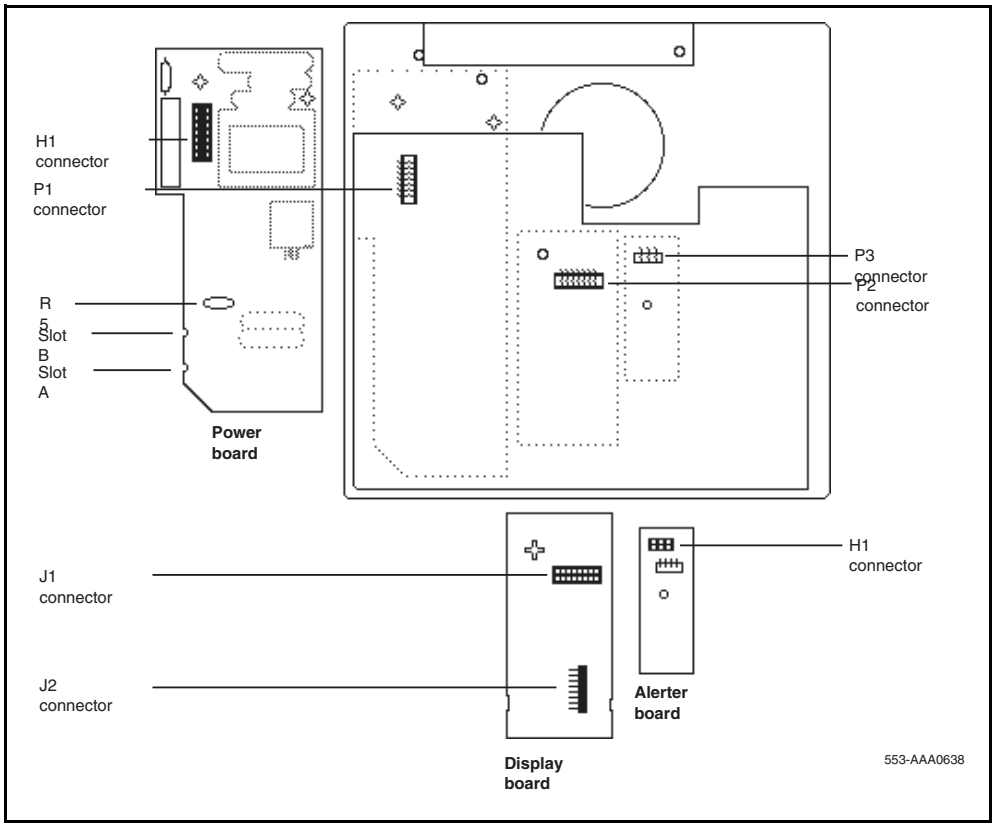

Figure 41
M2616/M2216ACD telephone and option boards

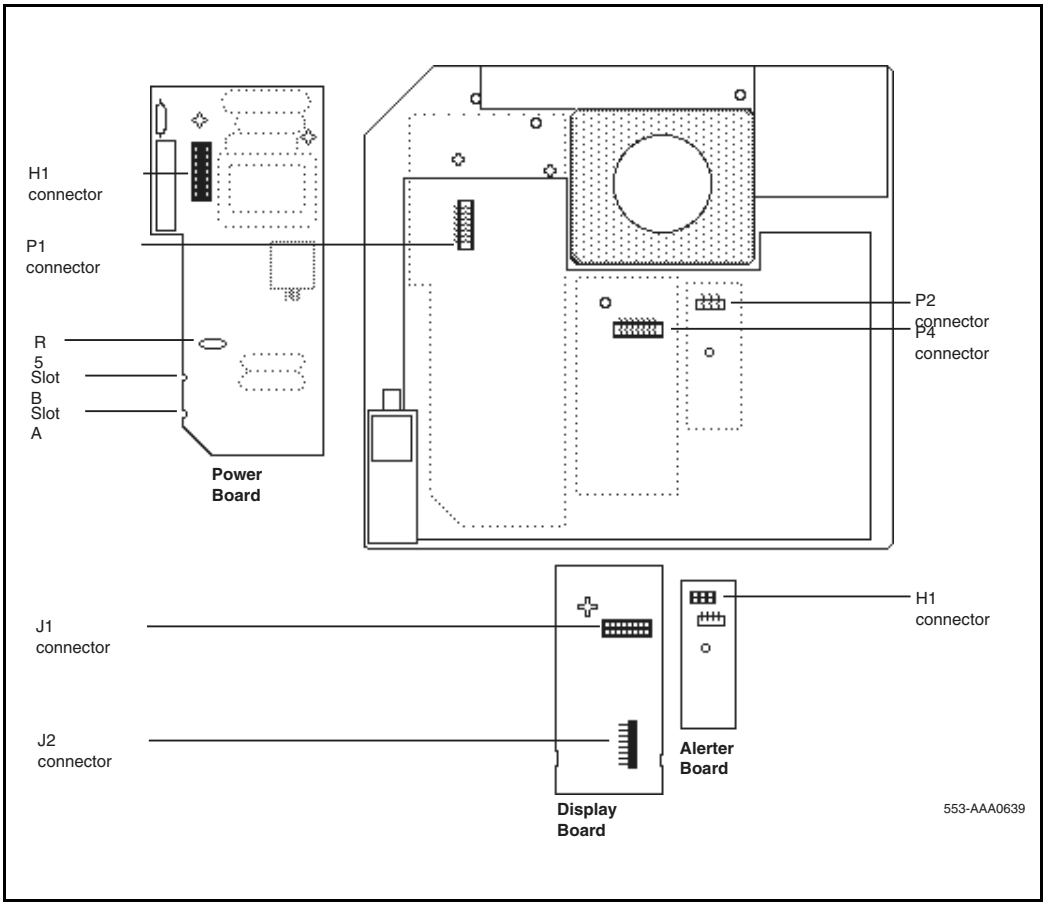

Procedure 27
Installing and removing the M2616/M2216ACD Power Supply Board on NTZK sets

CAUTION WITH ESDS DEVICES
Before handling internal telephone components, discharge static electricity from hands and tools by touching any grounded metal surface or conductor.

1 Remove the handset and place the telephone upside down on top of a level, solid work surface (such as a desktop) covered with soft material or paper to prevent damage to movable keys and the telephone face.

2 Disconnect all cords from the telephone.

3 Remove the two screws from the footstand assembly and unsnap the footstand assembly by pressing inward at the back of the footstand where it meets the base and pulling upward.

4 If the telephone is equipped with an MPDA or MCA, unplug the data cable from the base telephone jack.

5 Remove the four or five screws securing the base to the top cover. Remove the base and set it aside.

6 If the telephone is equipped with display, disconnect the Display ribbon cable from the display board and move it out of the way.

7 If the telephone is not equipped with a power supply board, remove jumpers from the P1 connector pins on the main board. Go to step 9.

If the telephone is equipped with a power supply board, go to step 8.

8 The power supply board is located on the left side of the telephone. Remove two small screws from the power supply board (near the top) and set them aside. Grasp the board firmly on each side. Work the board loose slowly until it is released.

If not replacing the power supply board, place the jumpers (A0288529) connecting the bottom two sets of the pins on the P1 connector.

9 Place the power supply board so that Slot B fits into the alignment pin on the telephone. See Figure 39 on page 147. Align the mounting holes in the board (near the top) over mounting holes in the telephone and carefully press down so that the H1 connector on the board slides onto the pins of the header (P1 on the M2616 or J2 on the M2006/M2008).

10 Take the self-tapping Phillips-head screws supplied with the power supply board and install them into the mounting holes. Tighten firmly with a #1 Phillips screwdriver.

11 If the telephone has a display, reconnect the display ribbon cable, routing the cable as described in Procedure 30 on page 165.

Note: Do not allow R5 on the power supply board to become bent during this procedure.

12 Replace the base. If the telephone is equipped with an MPDA or MCA, reconnect the data cable to the base telephone jack and replace the footstand (ensuring the MPDA or MCA cable does not get pinched between the base and footstand). Make sure the footstand is firmly seated to the base.

Note: Place the label supplied with the power supply board on the outside of the bottom cover of the telephone. This allows proper identification and tracking of the option level of the set.

13 Connect the telephone to a local transformer (see Figure 42 on page 155) or closet power supply (see Figure 43 on page 156). Refer to “Power requirements” on page 103 for requirements.

End of Procedure

Figure 42
Configuration of a local plug-in transformer

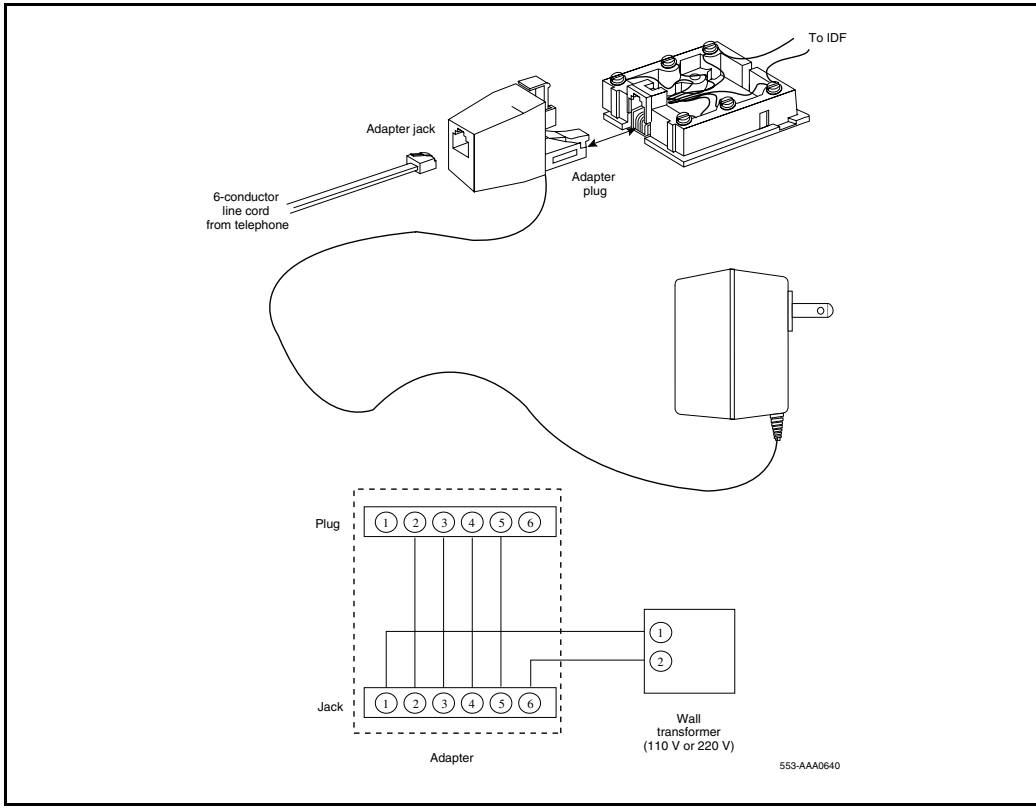

Figure 43
Closet power supply configuration

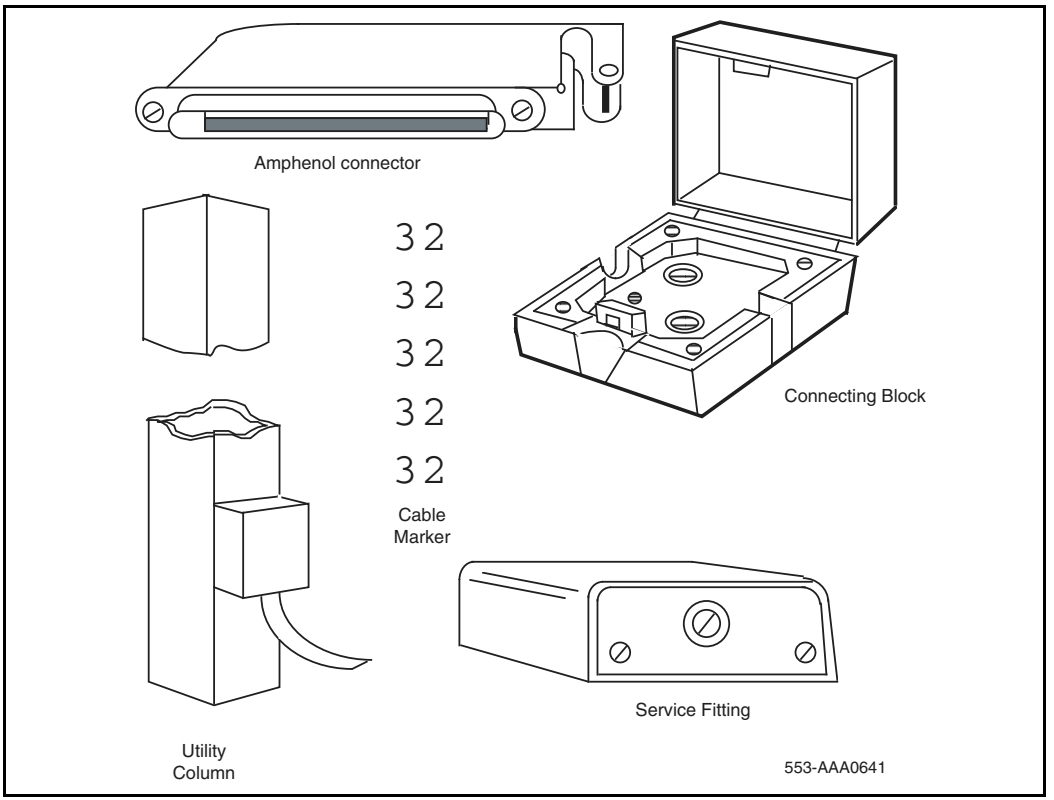

Power Supply Board (NT2K models)

Follow the steps in Procedure 28 to add a Power Supply Board to the telephone for connection to a transformer or closet power supply. This procedure applies to the M2006, M2008/M2008HF, M2216ACD and M2616 Meridian Digital telephones, NT2K models.

CAUTION
Damage to Equipment
Connect the optional Power Supply to the M2000 Series Meridian Digital Telephone only. Equipment damage may result from incorrect connections. Both the closet power supply and the transformer are for use with the M2000 Series Meridian Digital Telephone only.

Procedure 28
Installing and removing the M2006 or M2008 Power Supply Board on NT2K sets

CAUTION WITH ESDS DEVICES
Before handling internal components of telephones, discharge static electricity from hands and tools by touching any grounded metal surface or conductor.

Opening the Telephone

1. Disconnect and remove all cords (including the handset) from the telephone.
2. Place the telephone, upside-down, on a padded, level surface.
3. If the telephone does not have an MCA or MPDA adapter, go to step 7.
4. Using a #1 Phillips screwdriver, remove both screws from the footstand.
5. Remove the footstand from the base by pressing in the back of the footstand as it is lifted from the base.
6. Unplug the MCA or MPDA from the data line jack on the base, and set the footstand aside.
7. Remove all screws on the base of the telephone.

8 Remove the base from the telephone.

Attaching the Power Module

9 Lay the Power Module assembly into position on the left side of the telephone. Be careful not to bend R5 (the big disk) on the Power Module during installation.

10 If you are adding a Power Module to the set for the first time (not replacing an existing Power Module), the connector (J2 on the M2006 and M2008/M2008HF, P1 on the M2616) on the main board should have jumpers which must be removed at this point.

11 Connect the Power Module to the main board with the ribbon cable, keeping the red edge of the ribbon cable from the front of the telephone as show in Figure 44.

CAUTION
Damage to Equipment
This is a polarity-sensitive connection. The cable and the connector on the main board (J2 on the M2006 and M2008/M2008HF, and P1 on the M2616) are keyed.

12 Screw the Power Module into position on the left side of the telephone.

Figure 44
Ribbon cable placement

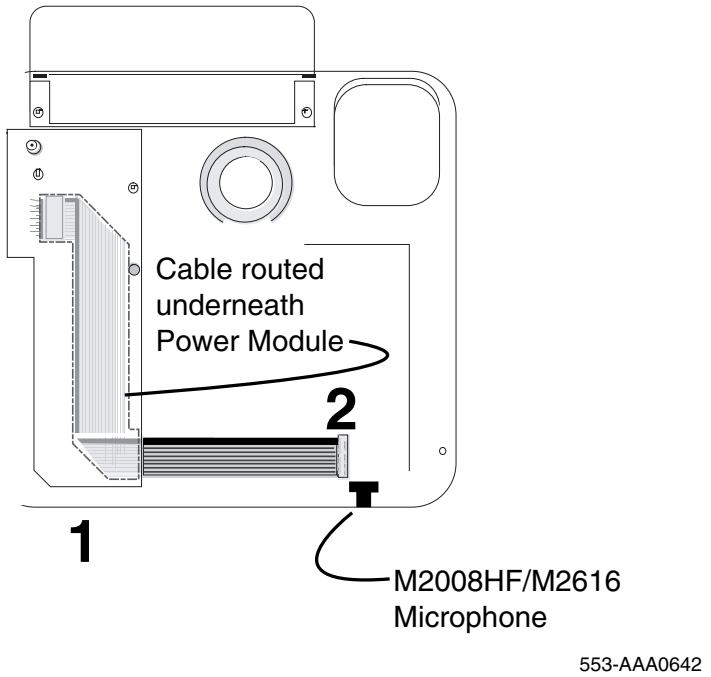

Reattaching the Base

13 Make sure that all ribbon cables are lying flat and not caught on any posts on the telephone cover or base.

CAUTION
For the M2616 and M2008HF, make sure that the microphone has not been moved from its black rubber holder. The holder should be seated in the main board near the ribbon cable that was just attached.

14 Replace the base.

15 Insert all screws and tighten them.

16 If the telephone has an MCA or MPDA, plug its cable into the jack on the telephone base.

17 Install the footstand, and secure it with two screws.

18 Reconnect all cords, including the handset.

Note: Place the label supplied with the power supply board on the outside of the bottom cover of the telephone. This allows proper identification and tracking of the option level of the set.

End of Procedure

Installing Displays

The following procedures cover installation of the various displays on the various sets.

- Installing NT2K24WA or NT2K25YL displays on NTZK sets:
  - M2008 – Use Procedure 29 on page 162.
  - M2616 or M2216ACD – Use Procedure 30 on page 165.

- Installing NT2K28AA displays on NTZK or NT2K sets:
  - Use Procedure 31 on page 168.
- Installing NT2K24WA or NT2K25YL displays on NT2K sets:
  - M2008 – Use Procedure 32 on page 174.

Installing NT2K24WA or NT2K25YL displays on NTZK sets

To install the display on an M2008 set, use Procedure 29. To install the display on an M2616 or M2216ACD set, use Procedure 30 on page 165.

Procedure 29
Installing and removing the M2008 Display on NTZK sets

CAUTION WITH ESDS DEVICES
Before handling internal components of telephones, discharge static electricity from hands and tools by touching any grounded metal surface or conductor.

1. Remove the handset and place the telephone upside down on top of a level, solid work surface covered with soft material or paper to prevent damage to movable keys and the telephone face.
2. Disconnect all cords from the telephone.
3. Remove the two screws from the footstand assembly and unsnap the footstand assembly by pressing inward at the back of the footstand where it meets the base and pulling upward.
4. If the telephone is equipped with an MPDA or MCA, unplug the data cable from the base telephone jack. Remove the four screws securing the base to the telephone. Remove the base and set it aside.
5. The power supply board (if equipped) is located on the left side of the telephone. Remove the two small screws from the power supply board (near the top) and set aside. Grasp the board firmly on each side. Carefully work the board loose until it is released.
6. If the telephone is not equipped with a display, go to step 9. If the telephone is equipped with a display, go to step 7.

Removing the display board

7. The display board is located at the left center of the telephone. Disconnect the display ribbon cable from the display board. Remove the small screw from the board. Grasp the board firmly on each end and pull upward to remove. To replace, go to step 9.

Removing the display

8 Remove the two or three screws from the display module. Remove the display from the telephone. To install the display option, go to step 11.

Installing the display board

9 Place the J1 connector of the display board over the P2 pins of the telephone. See Figure 45 on page 163. Press down slowly until J1 slides onto the P2 pins and is firmly seated.

Figure 45
Display cable routing

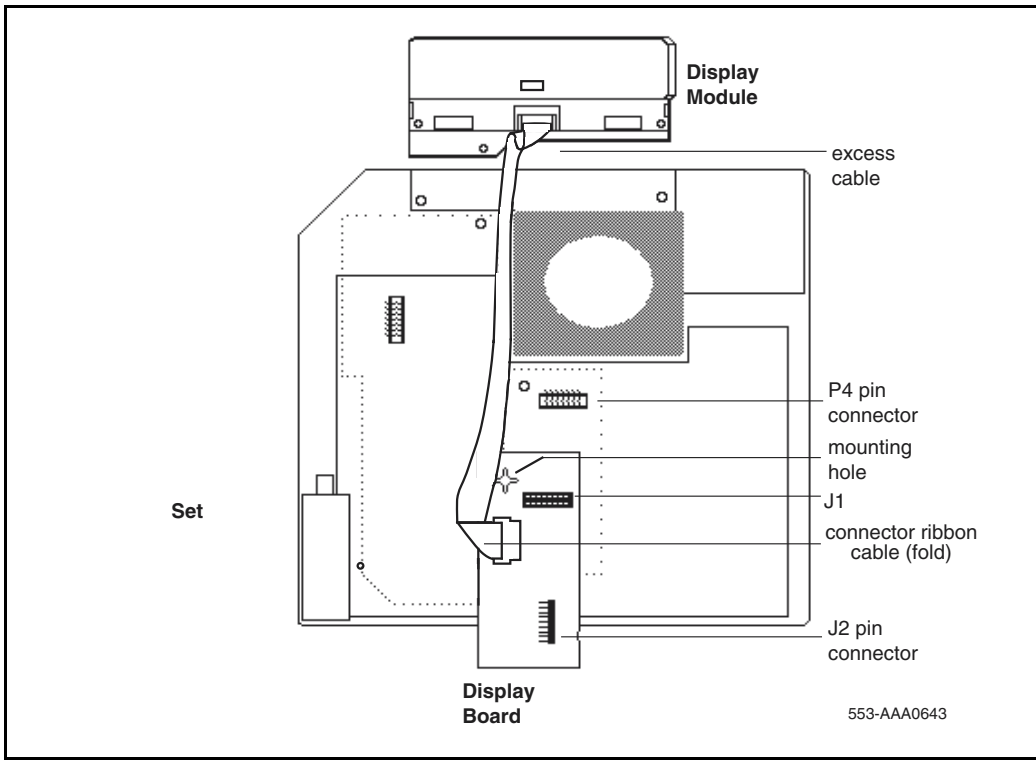

10 Insert the self-tapping Phillips-head screw supplied with the display into the mounting hole (near the top). Tighten it firmly with a #1 Phillips screwdriver.

Installing the display

11 Place the display facedown near the top of telephone and align the two mounting holes of the display with the two mounting holes of the telephone.

12 Insert two self-tapping Phillips-head screws from the faceplate into the mounting holes; tighten them firmly with a #1 Phillips screwdriver.

Note: Do not allow R5 on the power supply board to become bent during this procedure.

13 Install the power supply board. See Procedure 26 on page 149.

14 Fold the ribbon cable near the connector to align with the J2 pins on the display board, ensuring that the notch on the ribbon cable is facing toward the display board. Carefully work the ribbon cable connector onto the J2 pins until it is firmly seated. Route the cable flat beside the power supply board, gathering excess cable under the display. Be careful not to press the cable beneath the alignment posts or studs of the base. See Figure 45 on page 163.

15 Replace the base. If the telephone is equipped with an MPDA or MCA, reconnect the data cable to the base telephone jack and replace the footstand (ensuring that the MPDA or MCA cable does not get pinched between the base and footstand). Make sure the footstand is firmly seated to the base.

16 Tighten all the screws, reconnect all cords, and place the telephone in the normal operating position.

Note: Place the label supplied with the display on the outside of the bottom cover of the telephone. This allows proper identification and tracking of the option level of the set.

17 Perform the self-test (see Procedure 4 on page 57) and acceptance test procedures. See LD 31 in the *Software Input/Output: Administration* (553-3001-311).

End of Procedure

Procedure 30
Installing and removing the M2616/M2216ACD Display on NTZK sets

CAUTION WITH ESDS DEVICES
Before handling internal components of telephones, discharge static electricity from hands and tools by touching any grounded metal surface or conductor.

1 Remove the handset and place the telephone upside down on top of a level, solid work surface covered with soft material or paper to prevent damage to movable keys and the telephone face.

2 Disconnect all cords from the telephone.

3 Remove the two screws from the footstand assembly and unsnap the footstand assembly by pressing inward at the back of the footstand where it meets the base and pulling upward.

4 If the telephone is equipped with an MPDA or MCA, unplug the data cable from the base telephone jack. Remove the five screws securing the base to the telephone. Remove the base and set it aside.

5 If the telephone is not equipped with a display, go to step 9. If the telephone is equipped with a display, go to step 6.

Removing the display board

6 The display board is located at the left center of the telephone. Disconnect the display ribbon cable from the display board. Remove the small mounting screw from the board. Grasp the board firmly on each end and pull upward to remove it. To replace it, go to step 9.

Removing the display

7 The power supply board is located on the left side of the telephone. Remove the two small screws from the power supply board (near the top) and set them aside. Grasp the board firmly on each side. Carefully work the board loose until released.

8 Remove the two or three screws from the display Module. Remove the display from the telephone. To install the display, go to step 11.

Installing the display board

9 Place the J1 connector of the display board over the P2 pins of the telephone (see Figure 45 on page 163). Press down slowly until J1 slides onto the P2 pins and is firmly seated.

Note: If the center screw is included, do not perform step 10.

10 Insert the self-tapping Phillips-head screw supplied with the display into the mounting hole (near the top). Tighten firmly with a #1 Phillips screwdriver.

Installing the display

11 Place the display face-down near the top of the telephone and align the two mounting holes of the display with the mounting holes in the telephone.

12 Insert two self-tapping Phillips-head screws from the faceplate into the mounting holes; tighten them firmly with a #1 Phillips screwdriver.

13 Install the power supply board (see Procedure 13 on page 151). This step is not necessary on M2616 unless there are other hardware options.

14 Fold the ribbon cable near the connector to align it with the J2 pins on the display board, ensuring that the notch on the ribbon cable is facing toward the display board. Carefully work the ribbon cable connector onto the J2 pins until firmly seated. Route the cable flat beside the power supply board, gathering excess cable under the display. Be careful not to press the cable beneath the alignment posts or studs of the base. See Figure 45 on page 163.

Note: Do not allow R5 on the power supply board to become bent during this procedure.

15 Replace the base. If the telephone is equipped with an MPDA or MCA, reconnect the data cable to the base telephone jack and replace the footstand (ensuring that the MPDA or MCA cable does not get pinched between the base and the footstand). Make sure the footstand is firmly seated in the base.

Note: Place the label supplied with the display on the outside of the bottom cover of the telephone. This allows proper identification and tracking of the option level of the set.

16 Tighten all screws, reconnect all cords, and place the telephone in the normal operating position.

Figure 46
Display cable routing

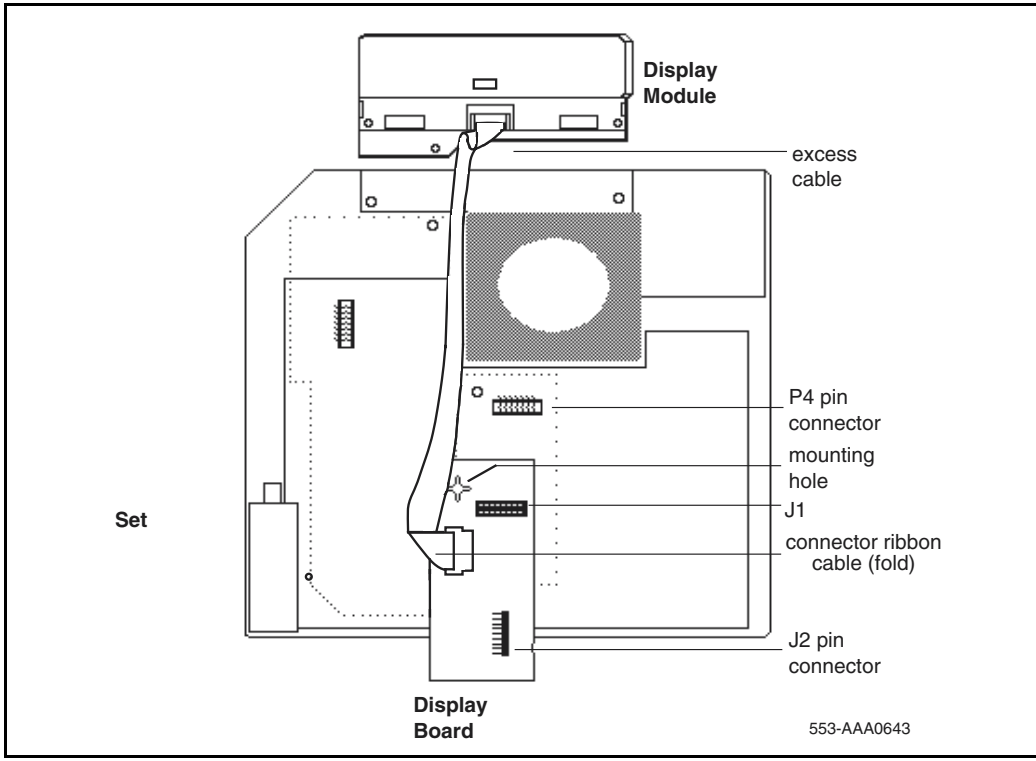

17 Perform the self-test (see Procedure 4 on page 57) and acceptance test procedures. See LD 31 in the *Software Input/Output: Administration* (553-3001-311).

End of Procedure

Installing NT2K28AA displays on NTZK or NT2K sets

Follow the steps in Procedure 31 to add an NT2K28AA display to M2008 and M2616 telephones.

Procedure 31
Installing NT2K28AA displays on NTZK or NT2K sets

CAUTION WITH ESDS DEVICES
Before handling internal components of telephones, discharge static electricity from hands and tools by touching any grounded metal surface or conductor.

Opening the Telephone

1. Disconnect and remove all cords (including the handset) from the telephone.
2. Place the telephone, upside-down, on a padded, level surface.
3. Using a #1 Phillips screwdriver, remove the two screws from the footstand.
4. Carefully remove the footstand from the base. Press inward at the back of the footstand where it meets the base and pull upward.
5. If the telephone has a Meridian Communications Adapter, unplug its cable from the base telephone jack.
6. Loosen all screws on the base of the telephone.
7. Remove the base from the telephone.

Removing the Fillerplate

8. Loosen the screws that hold the fillerplate.
9. Remove the fillerplate, being careful not to touch the foam in the speaker housing.

Attaching the Display Module

10. Position the Display Module as shown in Figure 47 on page 169.

Figure 47
Positioning the display module

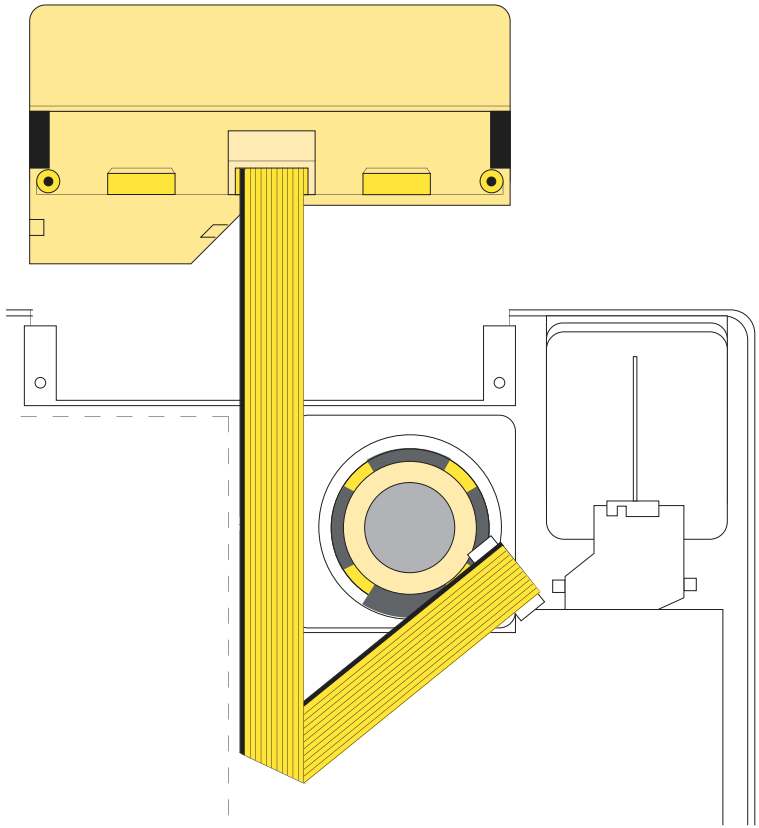

11 Lower the Display Module into place.

12 Insert the fillerplate screws in the Display Module screw holes

13 Tighten the fillerplate screws.

Note: Place the label supplied with the display on the outside of the bottom cover of the telephone. This allows proper identification and tracking of the option level of the set.

Connecting the Display Module Ribbon Cable

14 If installed, remove and discard the NT2K0013 daughterboard.

15 **NTZK models**: Make sure that the ribbon cable is folded as shown in Figure 48.

16 **NT2K models**: Make sure that the ribbon cable is folded as shown in Figure 49 on page 172.

17 Make sure the red line on the ribbon cable lines up with the white dot beside the connector pins (P2 on an NTZK M2008, J3 on an NT2K M2008, and P4 on an M2616) on the motherboard.

Figure 48
Connecting the Display Module Ribbon Cable, NTZK model

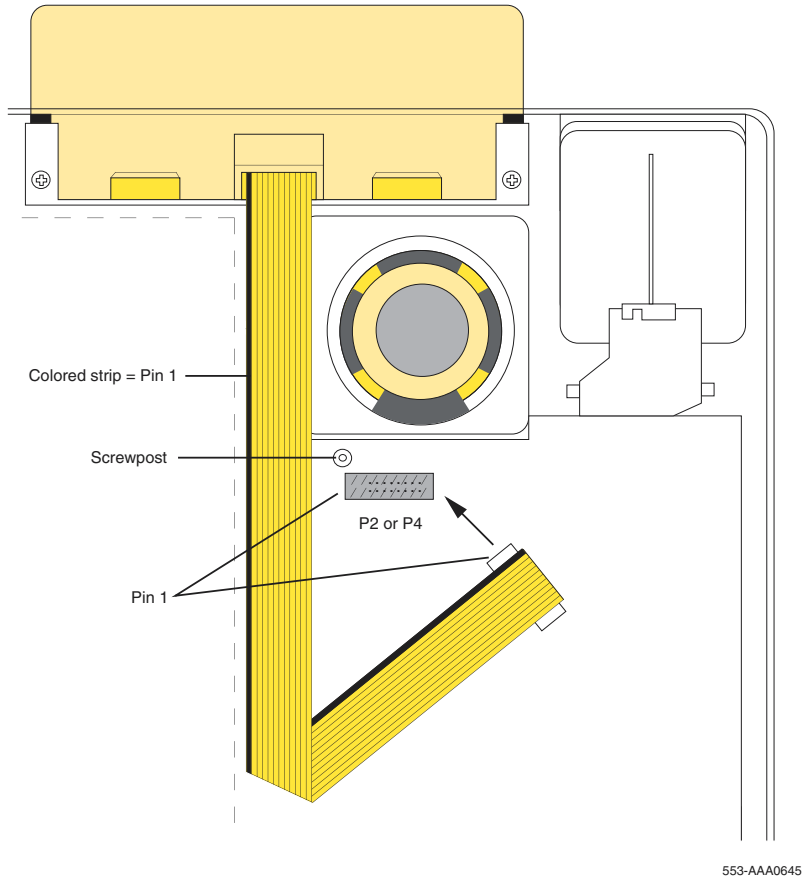

Figure 49
Connecting the Display Module Ribbon Cable, NT2K model

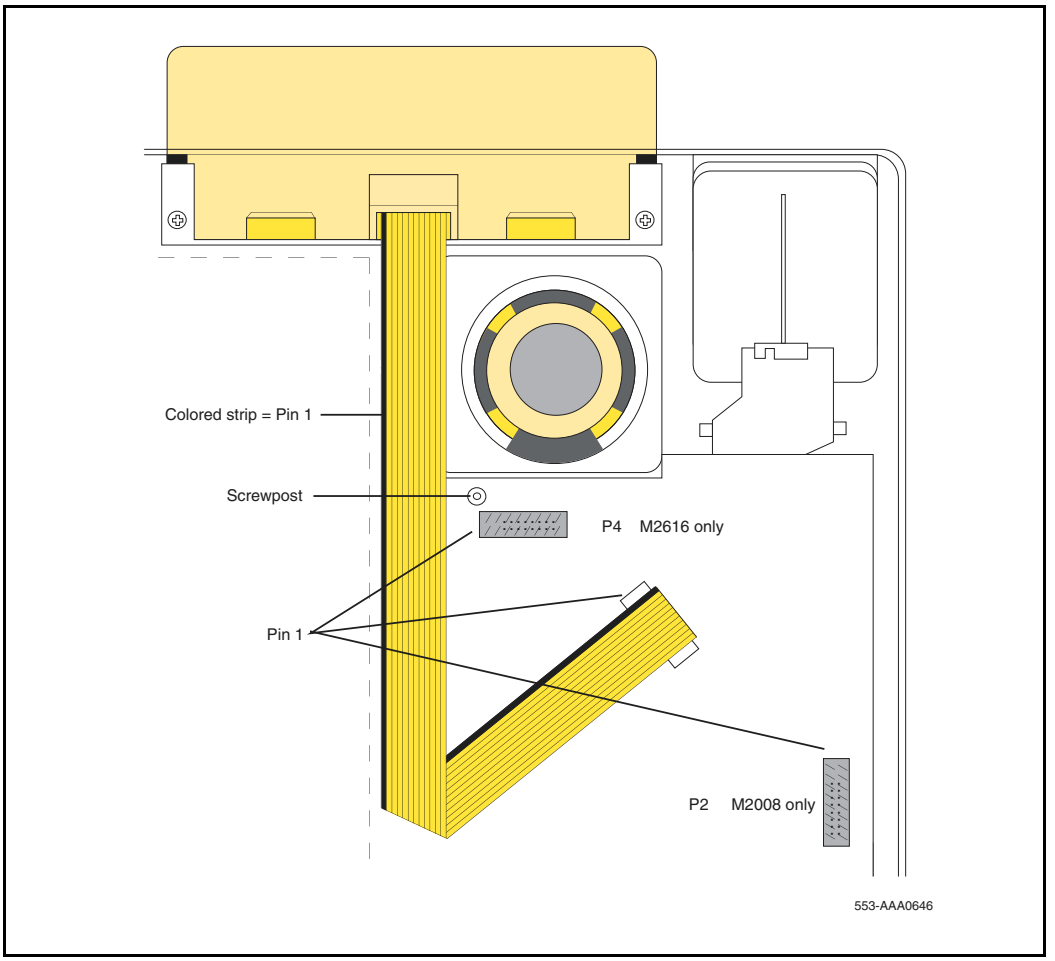

18 Slide the ribbon cable connector onto the connector pins (P2 on an NTZK M2008, J3 on an NT2K M2008, and P4 on an M2616) on the mother board.

CAUTION
This connection is polarity sensitive.

19 Ensure that the pins line up with the connector correctly and carefully work the connector on until it is firmly seated.

Reattaching the Base

20 Make sure the ribbon cable is lying flat and not caught over or under any alignment posts or studs on the telephone base. (For the M2616, allow it to cover the screw post and do not replace the screw on re-assembly.)

21 Replace the base.

22 Insert all screws (except the center screw on the M2616) and tighten them.

Reattaching the Footstand

23 If the telephone has a Meridian Programmable Data Adapter (MPDA) or Meridian Communications Adapter (MCA), plug its cable into the jack on the telephone base.

24 Replace the footstand, positioning it firmly on the base.

25 Insert and tighten all screws.

Note: Place the label supplied with the display on the outside of the bottom cover of the telephone. This allows proper identification and tracking of the option level of the set.

Reconnecting the Telephone

26 Reconnect all cords.

27 Turn the telephone right-side-up and place it in a normal operating position.

28 Reconnect the handset.

End of Procedure

Installing NT2K24WA or NT2K25YL displays on NT2K sets

Use Procedure 32 to install the display on the M2008 set. Use Procedure 33 on page 177 to install the display on the M2616 set.

Procedure 32
Installing and removing the M2008 Display on NT2K sets

CAUTION WITH ESDS DEVICES
Before handling internal telephone components, discharge static electricity from hands and tools by touching any grounded metal surface or conductor.

1 Remove the handset and place the telephone upside down on top of a level, solid work surface covered with soft material or paper to prevent damage to movable keys and the telephone face.

2 Disconnect all cords from the telephone.

3 Remove the two screws from the footstand assembly and unsnap the footstand assembly by pressing inward at the back of the footstand where it meets the base and pulling upward.

4 If the telephone is equipped with an MPDA or MCA, unplug the data cable from the base telephone jack. Remove the four screws securing the base to the telephone. Remove the base and set it aside.

5 The power supply board (if equipped) is located on the left side of the telephone. Remove the two small screws from the power supply board (near the top) and set aside. Grasp the board firmly on each side. Carefully work the board loose until it is released.

6 If the telephone is not equipped with a display, go to step 9. If the telephone is equipped with a display, go to step 7.

Removing the display board

7 The display board is located at the left center of the telephone. Disconnect the display ribbon cable from the display board. Remove the small screw from the board. Disconnect the P0738600 cable from connector J3 on the M2008. Remove the board and cable from the set. To replace, go to step 9.

Removing the display

8 Remove the two or three screws from the display module. Remove the display from the telephone. To install the display option, go to step 11.

Installing the display board

9 Connect the P0738600 cable to the J1 connector of the display board. Place the board on the mounting post (see Figure 50 on page 176).

10 Insert the self-tapping Phillips-head screw supplied with the display into the mounting hole (near the top). Tighten it firmly with a #1 Phillips screwdriver.

11 Connect the loose end of the P0738600 cable to the J3 pins of the telephone. Press down until the connector slides onto the J3 pins and is firmly seated.

Installing the display

12 Place the display facedown near the top of telephone and align the two mounting holes of the display with the two mounting holes of the telephone.

13 Insert two self-tapping Phillips-head screws from the faceplate into the mounting holes; tighten them firmly with a #1 Phillips screwdriver.

Note: Do not allow R5 on the power supply board to become bent during this procedure.

14 If the MPDA or MCA option is installed, install the power supply board (see Procedure 28 on page 157).

Figure 50
Connecting the cable to the display board

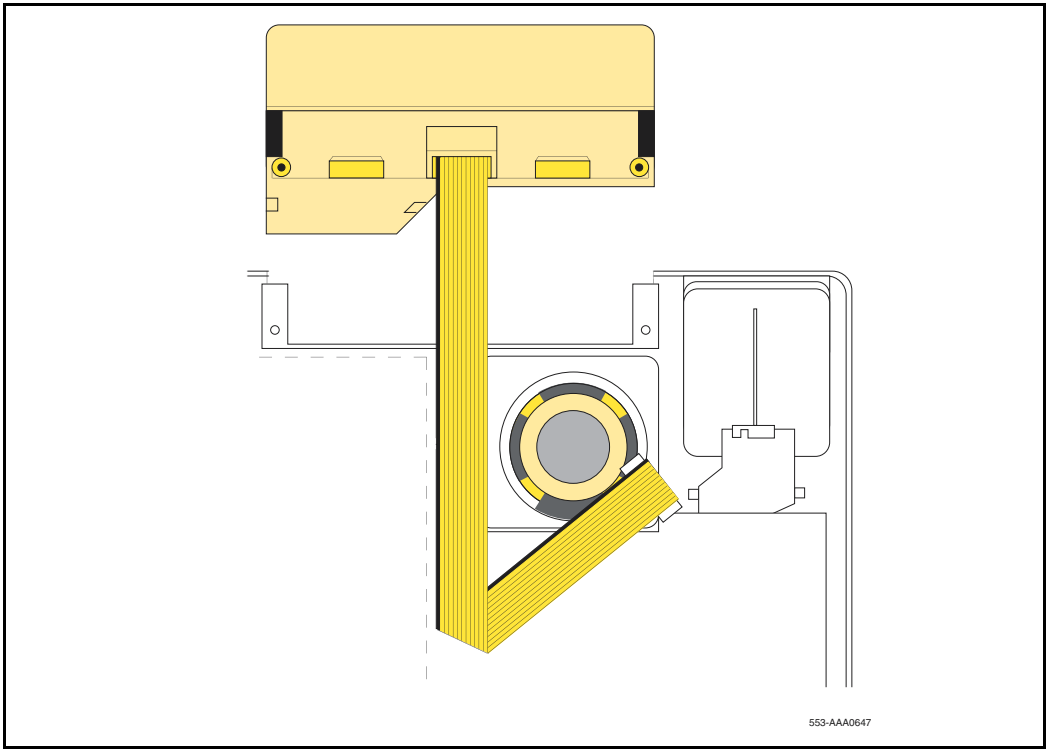

15 Fold the ribbon cable near the connector to align with the J2 pins on the display board, ensuring that the notch on the ribbon cable is facing toward the display board. Carefully work the ribbon cable connector onto the J2 pins until it is firmly seated. Route the cable flat beside the power supply board, gathering excess cable under the display. Be careful not to press the cable beneath the alignment posts or studs of the base. See Figure 50 on page 176.

16 Replace the base. If the telephone is equipped with an MPDA or MCA, reconnect the data cable to the base telephone jack and replace the footstand (ensuring that the MPDA or MCA cable does not get pinched between the base and footstand). Make sure the footstand is firmly seated to the base.

Note: Place the label supplied with the display on the outside of the bottom cover of the telephone. This allows proper identification and tracking of the option level of the set.

17 Tighten all the screws, reconnect all cords, and place the telephone in the normal operating position.

18 Perform the self-test (Procedure 4) and acceptance test procedures. See LD 31 in the *Software Input/Output: Administration* (553-3001-311).

End of Procedure

Procedure 33
Installing and removing the M2616 Display on NT2K sets

CAUTION WITH ESDS DEVICES
Before handling internal components of telephones, discharge static electricity from hands and tools by touching any grounded metal surface or conductor.

1 Remove the handset and place the telephone upside down on top of a level, solid work surface covered with soft material or paper to prevent damage to movable keys and the telephone face.

2 Disconnect all cords from the telephone.

3 Remove the two screws from the footstand assembly and unsnap the footstand assembly by pressing inward at the back of the footstand where it meets the base and pulling upward.

4 If the telephone is equipped with an MPDA or MCA, unplug the data cable from the base telephone jack. Remove the five screws securing the base to the telephone. Remove the base and set it aside.

5 If the telephone is not equipped with a display, go to step 9. If the telephone is equipped with a display, go to step 6.

Removing the display board

6 The display board is located at the left center of the telephone. Disconnect the display ribbon cable from the display board. Remove the small mounting screw from the board. Grasp the board firmly on each end and pull upward to remove it. To replace it, go to step 9.

Removing the display

7 The power supply board is located on the left side of the telephone. Remove the two small screws from the power supply board (near the top) and set them aside. Grasp the board firmly on each side. Carefully work the board loose until released.

8 Remove the two or three screws from the display Module. Remove the display from the telephone. To install the display, go to step 11.

Installing the display board

9 Place the J1 connector of the display board over the P4 pins of the telephone (see Figure 50 on page 176). Press down slowly until J1 slides onto the P4 pins and is firmly seated.

10 Insert the self-tapping Phillips-head screw supplied with the display into the mounting hole (near the top). Tighten firmly with a #1 Phillips screwdriver.

Installing the display

11 Place the display face-down near the top of the telephone and align the two mounting holes of the display with the mounting holes in the telephone.

12 Insert two self-tapping Phillips-head screws from the faceplate into the mounting holes; tighten them firmly with a #1 Phillips screwdriver.

13 Install the power supply board (see Procedure 13 on page 151). This step is not necessary on the M2616 unless there are other hardware options.

14 Fold the ribbon cable near the connector to align it with the J2 pins on the display board, ensuring that the notch on the ribbon cable is facing toward the display board. Carefully work the ribbon cable connector onto the J2 pins until firmly seated. Route the cable flat beside the power supply board, gathering excess cable under the display. Be careful not to press the cable beneath the alignment posts or studs of the base. See Figure 50 on page 176.

Note: Do not allow R5 on the power supply board to become bent during this procedure.

15 Replace the base. If the telephone is equipped with an MPDA or MCA, reconnect the data cable to the base telephone jack and replace the footstand (ensuring that the MPDA or MCA cable does not get pinched between the base and the footstand). Make sure the footstand is firmly seated in the base.

Note: Place the label supplied with the display on the outside of the bottom cover of the telephone. This allows proper identification and tracking of the option level of the set.

16 Tighten all screws, reconnect all cords, and place the telephone in the normal operating position.

17 Perform the self-test (see) and acceptance test procedures. See LD 31 in the *Software Input/Output: Administration* (553-3001-311).

End of Procedure

External Alerter Board

Use Procedure 34 on page 180 to add an External Alerter Board to the M2006, M2008, M2216ACD, or M2616 telephone. See Figure 51 on page 182 for information on hooking up the third-party External Alerter device.

Procedure 34
Installing and removing the External Alerter Board

CAUTION WITH ESDS DEVICES
Before handling internal components of telephones, discharge static electricity from hands and tools by touching any grounded metal surface or conductor.

1 Remove the handset and place the telephone upside down on a level, solid work surface covered with soft material or paper to prevent damage to movable keys and the telephone face.

2 Disconnect all cords from the telephone.

3 Remove the two screws from the footstand assembly and unsnap the footstand assembly by pressing inward at the back of the footstand where it meets the base and pulling upward.

4 If the telephone is equipped with an MPDA or MCA, unplug the data cable from the base telephone jack.

5 Remove the four screws securing the base of the telephone to the top cover. Remove the base and set aside.

6 If the telephone is not equipped with an External Alerter Board, go to step 8. If replacing an existing External Alerter Board, go to step 7.

Removing the External Alerter Board

7 The External Alerter Board is located at the right center of the telephone. Remove the screws from the board. Grasp the board firmly on each end and pull upward to remove.

Installing the External Alerter Board

8 Place the H1 connector of the External Alerter Board over the P3 pins of the telephone (see Figure 40 on page 151 for M2006/M2008; see Figure 41 on page 152 for M2616/M2216ACD). Align the mounting hole over the mounting post. Carefully work H1 onto the P3 pins until firmly seated. Place the self-tapping Phillips-head screw supplied with the External Alerter Board into the mounting hole and tighten it with a #1 Phillips screwdriver.

9 To signal the External Alerter when the telephone's handset or speaker is active, place the jumpers (AO288529) connecting the two right-most pins on the alerter board.

To signal the External Alerter when the telephone is ringing or buzzing, place the jumpers connecting the two left-most pins on the External Alerter Board.

10 If the telephone is not yet equipped with the power supply board, install it (see Procedure 13 for M2006/M2008; see Procedure 28 on page 157 for M2616/M2016S/M2216ACD).

Note: Do not allow R5 on the power supply board to become bent during this procedure.

11 Replace the base. If the telephone is equipped with an MPDA or MCA, reconnect the data cable to the base telephone jack and replace the footstand (ensuring that the MPDA or MCA cable does not get pinched between the base and the footstand). Make sure the footstand is firmly seated in the base.

12 Tighten all screws, reconnect the line cord, and place the telephone in the normal operating position.

Note: Place the label supplied with the External Alerter on the outside of the bottom cover of the telephone. This allows proper identification and tracking of the option level of the set.

13 For the connecting block configuration, see Figure 51.

14 Perform the self-test (see Procedure 4 on page 57) and acceptance test procedures. See LD 31 in the *Software Input/Output: Administration* (553-3001-311).

End of Procedure

Figure 51
External Alerter connecting block configuration

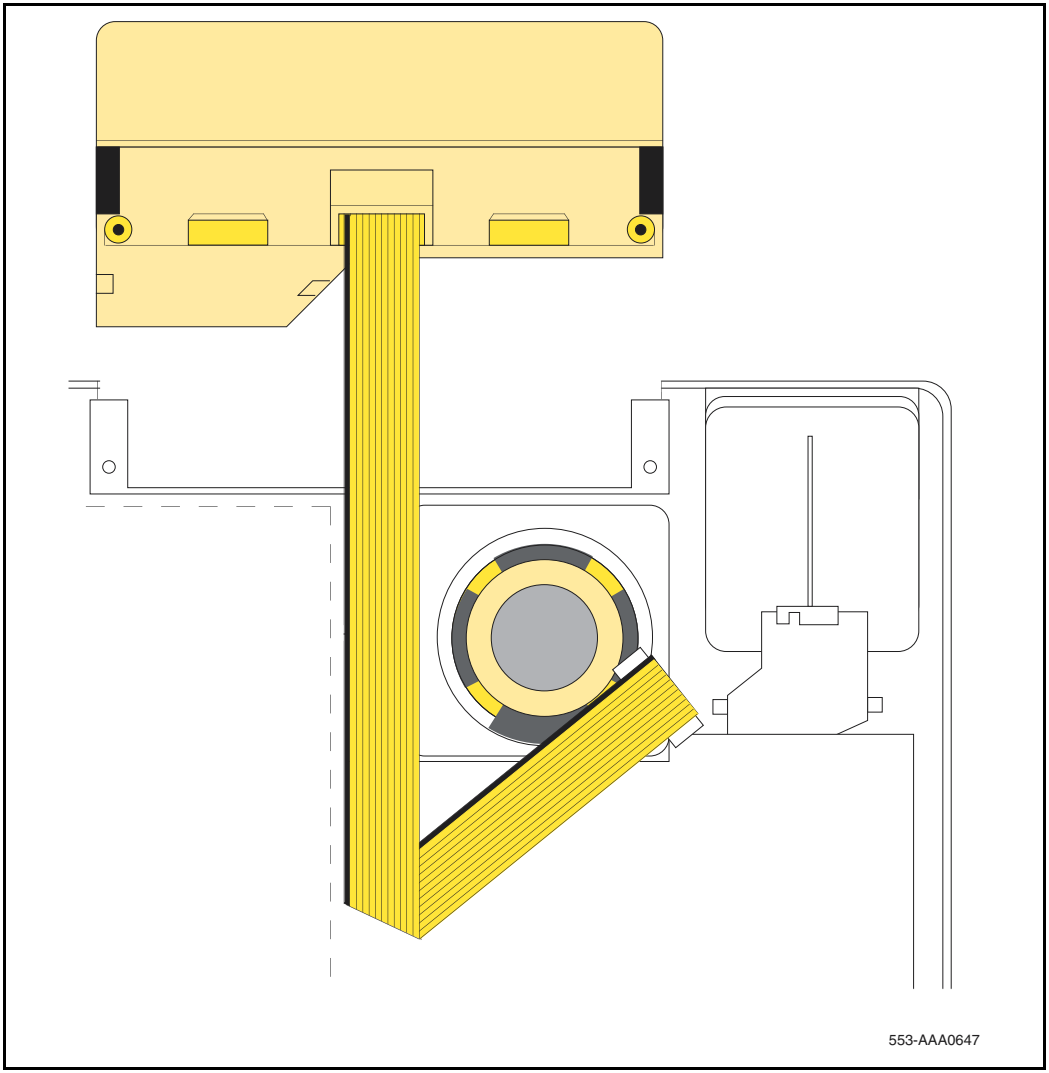

Key Expansion Modules

Follow the steps in Procedure 35 to add one (single) or two (double) Key Expansion Modules to the M2616 or M2216ACD telephones.

Note 1: Have the associated footstand on hand before installing the Key Expansion Modules.

Note 2: Adding a Key Expansion Module to a telephone requires a power supply board along with an additional power source (see Procedure 26 on page 149 for the M2006/M2008; see Procedure 13 on page 151 for the M2616/M2216ACD).

Procedure 35
Installing and removing Key Expansion Module(s) on the M2616 and M2216ACD telephones

1 Remove the handset and place the telephone upside down on top of a level, solid work surface covered with soft material or paper to prevent damage to movable keys and the telephone face.

2 Disconnect all cords from the telephone.

3 Remove the two screws from the footstand assembly and unsnap the footstand assembly from the telephone by pressing inward at the back of the footstand where it meets the base and pulling upward.

Note: If the M2616/M2216ACD is equipped with a Meridian Programmable Data Adapter (MPDA) or Meridian Communications Adapter (MCA), it must be removed and installed into the Key Expansion Module footstand. Use Procedure 24 on page 145.

4 If the telephone is not equipped with a Key Expansion Module(s), go to step 7. If replacing the Key Expansion Module(s), go to step 5.

Removing the Key Expansion Module(s)

5 Remove the screws from the footstand assembly (where it meets the Key Expansion Module), and unsnap the footstand assembly from the Key Expansion Module and telephone by pressing inward at the back of the footstand where it meets the base and pulling upward.

6 Remove the interface cable from the telephone by pressing down on the locking tab. If equipped, remove the interface cable from the first Key Expansion Module (closest to the telephone).

Installing the Key Expansion Module(s)

7 If the telephone is not yet equipped with the power supply board, install the Power Board (see Procedure 27 on page 153).

8 Align the bottom of the Key Expansion Module(s) to the bottom of the telephone (see Figure 52 on page 185).

9 Snap the ribbon cable connector into the bottom interface jack on the Key Expansion Module.

Note: Use the cable supplied with the module. This is a special cable required for EMI compliance.

Snap the other end of the ribbon cable into the interface jack in the telephone (left side). Gather the excess cable in the base of the Key Expansion Module.

10 To add a second Key Expansion Module, snap a second ribbon cable connector into the bottom interface jack on the second Key Expansion Module. Snap the other end of the ribbon cable into the top interface jack on the first Key Expansion Module (see Figure 52 on page 185). Gather the excess cable in the base of the second Key Expansion Module.

11 If the telephone is equipped with an MPDA or MCA, reconnect the data cable to the base telephone jack. Make sure the MPDA or MCA cable (and interface cable) do not get pinched between the base and footstand.

12 Secure the footstand to the Key Expansion Module(s) and telephone by placing the tabs of the footstand into the slots provided on the base of the Key Expansion Module and telephone and pressing down. Make sure the footstand is firmly seated on the base.

Note: Use the cable supplied with the module. This is a special cable required for EMI compliance. Newer versions of the Key Expansion Module use a longer modified cable than was used on earlier versions.

Ensure that the ribbon cable(s) are not pinched between the footstand and mounting posts.

13 Insert the three (four if there are two modules) self-tapping, Phillips-head screws supplied with the Key Expansion Module into the mounting holes in the bottom of the footstand. Tighten firmly with a #1 Phillips screwdriver.

Note: Place the label supplied with the Key Expansion Module(s) on the outside of the bottom cover or footstand of the telephone. This allows proper identification and tracking of the option level of the set.

14 Perform the self-test (see Procedure 4 on page 57) and acceptance test procedures. See LD 31 in the *Software Input/Output: Administration* (553-3001-311).

Figure 52
Key Expansion Module connections (bottom view)

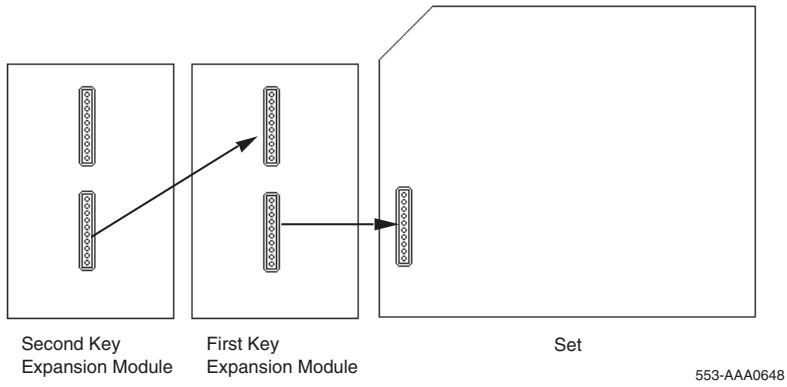

End of Procedure

Wall mounting

The M2006, M2008, M2616, and M2016S telephones are equipped with a reversible footstand that allows for wall mounting. The wall mount clip should be purchased and inserted in the handset well to hold the handset securely in place on wall-mounted telephones. M2000 Series Meridian Digital Telephones can be hung on the wall with an installed display or Key Expansion Module.

> ***Note:*** The footstand cannot be reversed when the Meridian Programmable Data Adapter or Meridian Communications Adapter is equipped, so telephones with data cannot be wall-mounted. Additionally, some wall plates are too deep to allow for wall mounting on top of the plate. In these cases, mount the telephone on the wall next to the plate.

An additional clip is provided for wall mounting the telephone. This clip is attached to the switchhook rest to prevent the handset from slipping when mounted on the wall.

Procedure 36
Wall mounting instructions for M2000 Series Meridian Digital Telephones

1. Remove the handset and place the telephone upside down on top of a level, solid work surface covered with soft material or paper to prevent damage to movable keys and the telephone face.
2. Disconnect all cords from the telephone.
3. Remove the two screws from the footstand assembly and unsnap the footstand assembly by pressing inward at the back of footstand where it meets the base, and pulling upward.
4. Rotate the footstand 180° and snap the footstand back into place on the telephone bottom cover. Make sure the footstand is firmly seated on the base of the telephone.
5. Tighten all screws and replace all cords.
6. Insert the wall mounting clip in the switchhook rest.

7 Mount the telephone on the wall using the wall mount holes provided on the bottom of the footstand.

End of Procedure

Troubleshooting

Use Table 28 to check problems encountered when installing M2000 Series Meridian Digital Telephones and their options.

Table 28
Troubleshooting M2000 Series Meridian Digital Telephones (Part 1 of 5)

Symptom	Solution	
Telephone does not work.	1	Unplug the line cord from the telephone and plug it back in.
	2	If the telephone uses external power, make sure the transformer or closet power supply is properly connected and that the power supply board is properly installed.
		If the telephone does not use external power, make sure that jumpers are placed connecting the bottom two sets of pins on the P1 connector on the main circuit board.
All LCDs flash and telephone does not function.	1	Press the Release (Rls) key.
	2	Unplug the line cord from the telephone and plug it back in.
Telephone wobbles.	1	Ensure that all cords are properly routed through channels in the footstand.
	2	Check that the footstand is firmly seated on the telephone.
	3	Ensure that all feet are firmly seated in the footstand.

Table 28
Troubleshooting M2000 Series Meridian Digital Telephones (Part 2 of 5)

Symptom	Solution	
Display does not work.	1	Unplug the line cord from the telephone and plug it in again.
	2	Ensure that the transformer is plugged in or the closet power is connected (M2008 only).
	3	Ensure that the power supply board is installed properly (M2008 only).
Display does not work. (cont.)	4	Check that the display ribbon cable is properly connected to the display board and has not been pinched.
	5	Ensure that the display board is installed correctly and held securely with a mounting screw.
	6	M2006, M2008, M2616 – ensure that ADD class of service is configured in LD 11. See the *Software Input/Output: Administration* (553-3001-311).
There is no response when you type <CR> or AT at the terminal.	1	Press the P key and dial 28 to make sure you are in terminal mode.
	2	Make sure the PC or terminal's has power and is online.
	3	If the equipment connected to the MCA is not configured as Data Terminal Equipment, it is necessary to connect using a null modem cable.
	4	Make sure the MCA is receiving external power. Check to see that the power cables are connected properly and the external power supply is running.

Table 28
Troubleshooting M2000 Series Meridian Digital Telephones (Part 3 of 5)

Symptom	Solution
	5 If there is a display on the telephone, press the P key and dial 63 to get into EIA Monitor mode. Be sure the MCA is receiving signals from the terminal by watching the display while entering carriage returns on the keyboard. If the indicator flashes, the connection is correct. If not, check the cable to make sure it is the standard RS-232 and is properly connected.
	6 Press the P key and dial 62 to ensure that the MCA is in the asynchronous mode. Press the P key and dial 20 to change to the asynchronous mode.
	7 Press the P key and dial * to ensure that the MCA is in the idle mode.
The prompt CALL CONNECTED. SESSION STARTS is followed by RELEASE.	Check the configuration parameters of the far end data device. If they do not match those of the MCA, the call will be dropped. Change the parameters of your MCA to match.
Garbled prompts are sent to your terminal when you type <CR>.	Enter a period (.) followed by <CR> to perform an autoparity.
You are connected to a host computer, but get no response when you try to log on.	First, release the call. Turn on Remote Loopback and make the call again. Type some characters at the terminal. If the characters echo back and appear on the terminal, the problem is with the far end data device. If the characters do not appear on the terminal, the problem is with the MCA. Contact the telephone system administrator.
You try to make a data call from the initial prompt (or Main menu) in keyboard dialing. You see the prompt CALLING.	First, hold down the break key(s) for two seconds, enter <CR>, and try again to make the data call. If the problem persists, the MCA is probably disabled. Contact the telephone system administrator.

Table 28
Troubleshooting M2000 Series Meridian Digital Telephones (Part 4 of 5)

Symptom	Solution	
MCA does not operate at all.	1	Check the LED in the back of the telephone to see if it is flashing. If the LED is steadily lit, the MCA needs to be configured in the system, or it may be bad. If the LED is not lit, the MCA requires external power.
	2	Make sure the cable from the terminal or PC is connected to the MCA.
	3	Check the data parameters for the display.
	4	Be sure the transformer is plugged in, or the closet power is connected.
	5	Be sure the cable between the MCA and the telephone is connected and has not been pinched.
	6	Be sure the power card is installed correctly. Verify that the jumper settings are correct for either RS-232 or V.35 (whichever you are using).
Key Expansion Module does not work.	1	Unplug and plug in the line cord.
	2	Ensure that the transformer is plugged in or that the closet power supply is connected.
	3	Ensure that the power supply board is installed properly.
	4	Make sure that the ribbon cable connecting the telephone and the Key Expansion Module is routed properly and is not pinched.
External Alerter does not work.	1	Ensure that the External Alerter Board is installed properly.
	2	Check that connections between the alerting device and the telephone connecting block are correct.

Table 28
Troubleshooting M2000 Series Meridian Digital Telephones (Part 5 of 5)

Symptom	Solution	
	3	Make sure that the jumpers are placed on the pins on the External Alerter Board as described in Procedure 34 on page 180.
	4	Ensure that the transformer is plugged in or the closet power is connected.
	5	Ensure that the power supply board is installed properly.
Note 1: If the pseudorandom pattern 511 data is idle, the telephone keypad dialing is inoperative. Use the release key to clear this condition. ***Note 2:*** If using an RS-232 cable to connect the MCA to an ADM3/5 terminal, be sure that pin 22 is disconnected. ***Note 3:*** Change the baud rate before changing the mode from synchronous to asynchronous. ***Note 4:*** Some terminals may drop DTR with the break. If this happens, RELEASE is not displayed.		

Figure 53
Flowchart for troubleshooting MCA

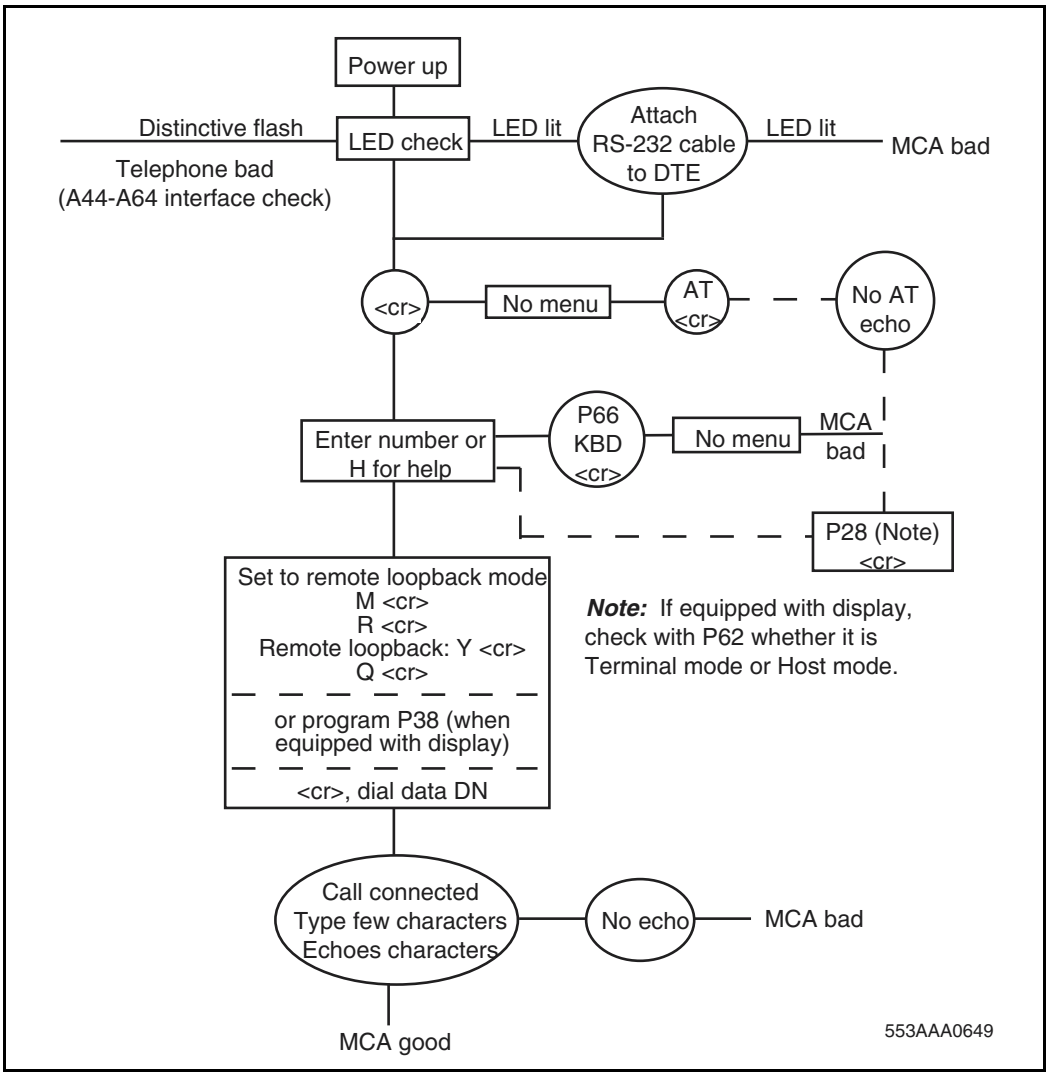

M2000 data options

Contents

This section contains information on the following topics:

Asynchronous Data Option

The M2000 series Meridian Digital Telephones can be equipped with an Asynchronous Data Option (ADO) to enable a data call to be made using keyboard dialing from an attached terminal or personal computer. Voice and data communications can be conducted simultaneously without causing any mutual interference.

Functional description

The ADO is mounted in the telephone and works in conjunction with the Digital Interface Chip to provide asynchronous communication up to 19.2 kbps from an ASCII data terminal or a personal computer to the private Integrated Services Network. The ADO appears as Data Circuit-terminating Equipment (DCE) in the terminal and connects to the Data Terminal Equipment (DTE) through an RS-232-C connector mounted on the ADO printed circuit board.

The Asynchronous Data Option supports the following:

- Hayes dialing
- Automatic data rate detection at all rates up to 19.2 kbps
- ASCII keyboard dialing (originating data calls to local and remote hosts or DTE by using the terminal keyboard)
- Call origination to local and remote hosts
- Call termination
- Ring Again Capability
- Auto Dial
- Speed Call
- Automatic or Manual answering of incoming data calls
- Manual Modem pooling
- Remote loopback
- Break detection and generation

ADO operating parameters

The table below shows the operating parameters for the ADO.

Data type	ASCII
Synchronization	Asynchronous, Start-Stop
Number of bits	8 bits
Parity	none (unchecked)
Data rate	300, 1200, 2400, 4800, 9600, 19200 bits per second (autobaud)
Stop bits	2 bits for 110 bits per second; 1 bit for all other speeds
Transmission	Full duplex

The ADO supports asynchronous ASCII operation. A data byte is received from the terminal or personal computer, a control byte is added, and the two bytes are transferred to the associated line card. In the other direction, two data bytes are received from the line card, the control byte is deleted, and the data byte is delivered to the terminal in a bit serial format, at the terminal's bit rate.

ADO external power supply

The ADO requires an external power supply in addition to the power from the line. See Table 29 on page 195. A 110 V ac 60 Hz, 100 V ac 50/60 Hz, or a 220 V ac 50 Hz multi-output power supply unit provides nominal voltages of +5 V, +12 V, and –12 V dc. The power supply connects to the back of the telephone through a 5-pin Molex power connector.

If the ac power supply fails, data calls cannot be processed. All external power supplies are equipped with short circuit and thermal shutdown protection.

Table 29 lists the input and output requirements for the ADO external power supply.

Table 29
I/O requirements for ADO external power supply (Part 1 of 2)

North American version	
NPS50220-03L5	Multi-output external power supply
	(A0336823), UL listed and CSA approved
Input:	57–63 Hz 115–132 V ac
Output:	+5 V dc, 1.0 A (pin 3 for supply, pin 2 for return)
	+12 V dc, 200 mA (pin 6 for supply, pin 1 for return)
	–12 V dc, 200 mA (pin 4 for supply, pin 1 for return)
Japanese version	
NPS50220-03L8	Multi-output external power supply
	(A0336891), Japan Standard ("T" Mark)

Table 29
I/O requirements for ADO external power supply (Part 2 of 2)

Input:	47–63 Hz 85–115 V ac
Output:	+5 V dc, 1.0 A (pin 3 for supply, pin 2 for return)
	+12 V dc, 200 mA (pin 6 for supply, pin 1 for return)
	–12 V dc, 200 mA (pin 4 for supply, pin 1 for return)
European version	
NPS50220-03L5	Multi-output external power supply
	(A0336166), conforming to NPS50561 general requirements and UL1012
Input:	57–63 Hz 200–240 V ac
Output:	+5 V dc, 1.0 A (pin 3 for supply, pin 2 for return)
	+12 V dc, 200 mA (pin 6 for supply, pin 1 for return)
	–12 V dc, 200 mA (pin 4 for supply, pin 1 for return)

Figure 54 shows a block diagram of the ADO and an M2317 telephone.

See the *Asynchronous Data User Guide* and the *M2317 Quick Reference Card*, for more information on ADO operation.

Figure 54
Block diagram of ADO and M2317 telephone

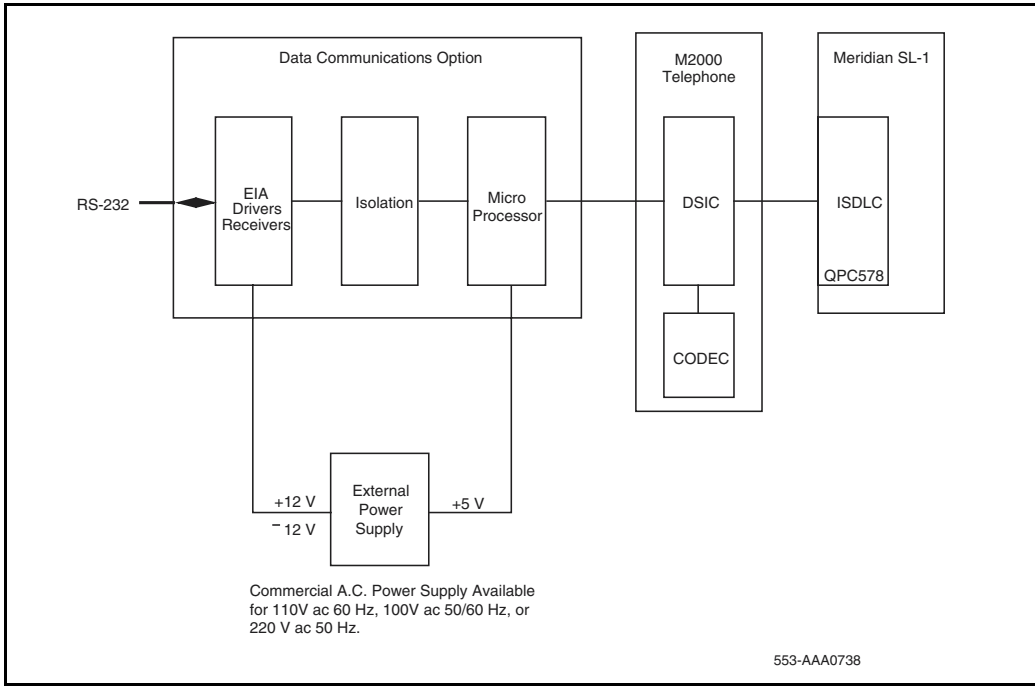

Meridian Communications Adapter

The Meridian Communications Adapter (MCA) replaces the Meridian Programmable Data Adapter (MPDA), and offers enhanced capability over the MPDA.

Functional description

The MCA mounts within the telephone. It enables synchronous and asynchronous ASCII terminals, and personal computers to be connected to the telephone using an RS-232-C or V.35 interface on a DB-25 connector. See Figure 19 on page 87.

The MCA enables synchronous applications (DTEs such as video conferencing equipment and Group IV fax units) to be connected to the telephone. System software enables access to data functions through both the keypad and service change in LD 11.

Asynchronous mode features supported by the MCA include the following:

- Asynchronous transmission at up to 19.2 kbps (autobaud)
- Enhanced Hayes commands, including upper- and lower-case dialing, voice call origination through AT dialing, hang-up data call, and on-line disconnect of voice call
- Script file capability that enables the MCA to learn a dial-up and log on sequence that can be played back to automatically access a host or service
- Voice Call Origination (VCO)
- DCE mode
- Autodial
- Ring Again
- Speed Call
- Autobaud and Autoparity Detect
- Modem Pool Calling
- Host/Terminal Mode

- Forced Data Terminal Ready (DTR)
- Dynamic Carrier Detect (DCD)
- Inactivity Time-out
- Remote Loopback
- RTS/CTS hardware flow control capability (when calling another MCA)

Synchronous mode features supported by the MCA include the following:

- Half Duplex/Full Duplex
- Internal and external clocking
- Modem and network capability
- Synchronous transmission up to 64 kbps
- Public Switched Data Services compatibility. MCA extends PSDS and 64K restricted and 64K clear capabilities to Modular telephones.
- V.25 bit dialing protocol support at all synchronous speeds up to 64 kbps. High-Level Data Link Control (HDLC) and Bisynch (character oriented) framing of the V.25 commands is supported.
- Programmable echo canceller disabling for 56 and 64 kbps network calls

Synchronous *and* asynchronous mode features supported by the MCA include the following:

- T-Link and DM-DM support
- T-Link and DM-DM are Nortel Networks proprietary protocols. The SL-100 and DMS data devices use T-Link. DM-DM is used by Succession 1000M, Succession 1000, and Meridian 1 data devices such as ASIM, AIM, ADM, SADM, Asynchronous Data Option (ADO), and MPDA. MCA can use both DM-DM and T-Link.
- Hotline
- Virtual Leased Line
- V.35 interface capability selectable with jumper plugs on the MCA

- Data tandem calls across TIE trunks, provided all switches involved are Nortel Networks machines
- PSDS tandem data calls across TIE trunks are supported with release 18 or later when each tandem node uses an ISDN Primary Rate Interface (PRI) or Basic Rate Interface (BRI) connection. See *Transparent Data Networking* (553-2731-110) for more information.

  Note: Internal PSDS calls are not supported.

MCA operating parameters

The MCA data parameters are stored locally, although the configuration is set in the system. Data parameters cannot be set in the system before installing the MCA in the telephone. If the parameters are set before the telephone is installed, the configuration information is lost.

Operating parameters are downloaded after the MCA is enabled in LD 11. System parameters are downloaded when the MCA is configured in LD 11, and power is reset. See the *Software Input/Output: Administration* (553-3001-311) for prompt and response details.

Data parameters can also be set through LD 11, as well as by the keypad.

The MCA communicates with Data Terminal Equipment (DTE) using the operating parameters shown below.

Synchronization	Asynchronous, Start-Stop
Number of bits	8 bits
Parity	none (unchecked)
Data rate	110, 150, 300, 1200, 2400, 4800, 9600,19200 bits per second (autobaud) asynchronous up to 64000 bits per second synchronous
Stop bits	2 bits for 110 bits per second; 1 bit for all other speeds (asynchronous only)
Transmission	Half duplex; full duplex

When installing an MCA or MPDA into NTZK or NT2K phone sets with a date code prior to January 1998, a Power Option board is required, along with an additional power source.

When installing an MCA in an NT9K or NT2K phone set with date code of January 1998 or later, install only the MCA. An additional Power Option board and Jumper board is not required. See Table 20: "NT2K model Power requirements, M2000 Series Meridian Digital Telephone sets" on page 106 for power requirements information.

Figure 55 on page 201 shows the back of a Modular telephone with an MCA mounted; Figure 56 on page 202 shows a block diagram of the Modular telephone and MCA.

See the *Meridian Communications Adapter User Guide* for more information on MCA operation. Also see "Ordering information" on page 111 for MCA ordering information.

Figure 55
Back of telephone showing MCA

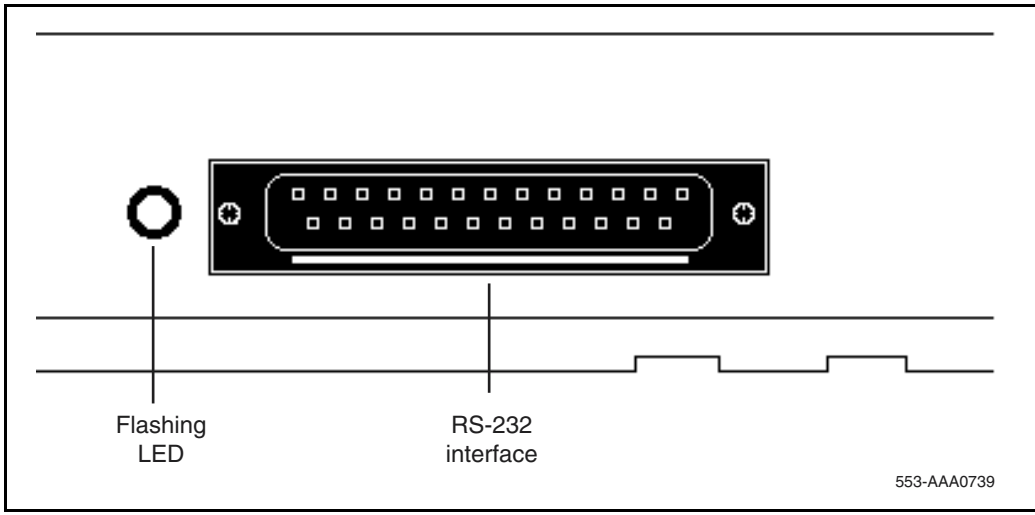

Figure 56
Block diagram of MCA and Modular telephone

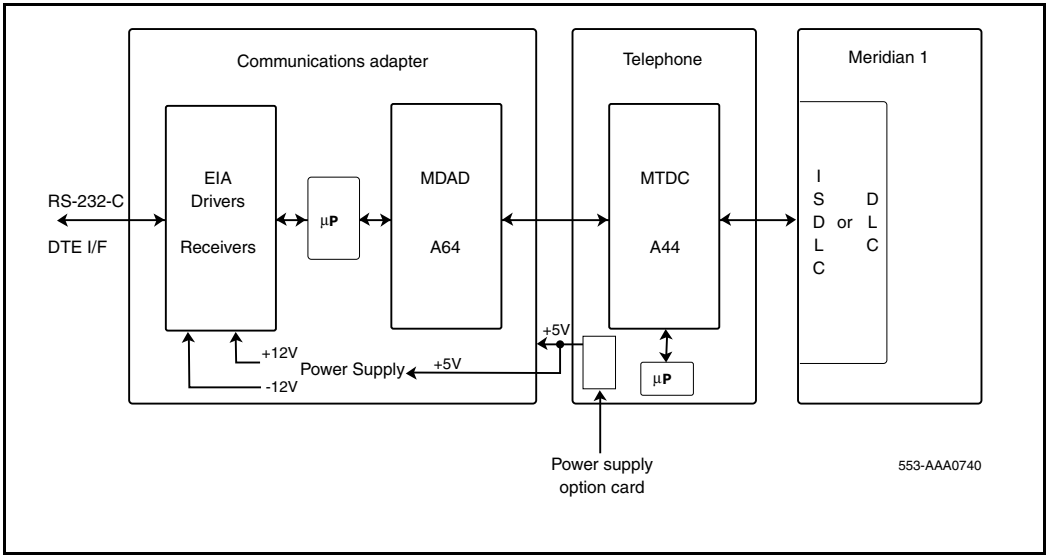

Meridian Communications Unit

The Meridian Communications Unit (MCU) provides a stand-alone version of the Meridian Communications Adapter (MCA).

Functional description

The Meridian Communications Unit (MCU) enables data to be transmitted and received using PSDS, over either the public network or a private network.

The MCU, which replaced the QMT21C, is designed for domestic and international use, with transmission speeds up to 19.2 kbps asynch and 64 kbps synch, integrated display, and self diagnostics.

The MCU supports autodialing, ring again, and speed calling, as well as autobauding and automatic parity detection. The MCU can be used for the following:

- Video conferencing

- LAN bridging
- Bulk data/PC file transfer
- Dial back-up
- Host connectivity

The MCU fully complies with RS-232C and can be configured as DCE or DTE to connect to a terminal, printer, or fax machine.

Unlike the MCA, the MCU provides a dedicated call key and call progress tones. The MCU also enables smart modem pooling.

The MCU supports the DM-DM, T-Link, V.25 bis, and PSDS interfaces as well as the RS-232C, CCITT V.35, CCITT V.24, and RS570/RS3449 (with different cables) interfaces. It complies with V.28 for European approval.

Refer to *Meridian Communications Unit and Meridian Communications Adapter: Description, Installation, Administration, Operation* (553-2731-109) or *Meridian Communications Unit User Guide and Meridian Communications Adapter Reference Guide* for detailed information on this feature.

Analog Terminal Adapter

For information on the Analog Terminal Adapter (ATA) see “Analog Terminal Adapter” on page 136.

M1250 and M2250 Attendant Consoles

Contents

This section contains information on the following topics:

Introduction

Attendant consoles are designed to assist in placing and extending calls into and out of a telephone switching system. The console is operated by an attendant who is the human interface between the system and the users.

Several types of attendant consoles are designed for telephone traffic control in the Succession 1000M, Succession 1000, and Meridian 1. Each provides attendants with specialized features that increase the speed and ease of call processing.

This document describes the M1250 and M2250 attendant consoles, and the Attendant PC Software application. The M1250 and M2250 consoles are functionally compatible with the QCW4 Attendant Console.

- The M1250 is designed to work in analog mode and functions through an analog line card when connected to a digital switch. Its cabling schemes are compatible with those of the QCW4 console.
- The M2250 is a digital version of the M1250, offering additional features. A Digital Line Card (DLC) connects the M2250 to the system. It has a modified cabling scheme.
- The Attendant PC Software application allows all functions supported by the M2250 to be performed on a computer workstation using a mouse pointing device or keyboard within a Windows 95® operating system environment. The M2250 attendant console is not required to run the Attendant PC Software application. Refer to the *Meridian 1 Attendant PC: Software User Guide* for more information on the Attendant PC Software.

Engineering and ordering codes

Refer to Table 30 for engineering and ordering codes for the types and colors of the M1250 and M2250 attendant consoles. For more ordering information, refer to *Equipment Identification* (553-3001-154).

Table 30
Engineering and ordering codes for the M1250 and M2250 and related equipment

Console model	Engineering code	Color	Ordering (CPC) code
M1250	NT2G00AC-35	Chameleon gray (ash)	A0387385
M1250	NT2G00AA-98	BTS dark gray	A0338244 (not available in North America)
M2250	NT6G00AF-35	Chameleon gray (ash)	A0393450

Table 30
Engineering and ordering codes for the M1250 and M2250 and related equipment

Console model	Engineering code	Color	Ordering (CPC) code
M2250	NT6G00AE-98	BTS dark gray	A0349187 (not available in North America)
BLF/CGM	NT3G40AB-35	Chameleon gray (ash)	A0375234
BLF/CGM	NT3G40AB-98	BTS dark gray	A0349423 (not available in North America)
Adjustable stand	NT3G30AA-35	Chameleon gray (ash)	A0348780
Adjustable stand	NT3G30AA-98	BTS dark gray	A0348778 (not available in North America)
ASM	NT7G10AA	N/A	A0366221
16V DC Power Supply (300 mA)	N/A	N/A	A0367601

Features

M1250 features

The M1250 has the following features:

- A four-line, 40 character, liquid crystal display (LCD) with backlighting. Power, including backlighting, is maintained during building power failures with the system's battery backup, if equipped.
- Angle adjustment of the display screen, which can be tilted through 90° from horizontal to fully vertical.

- Scrolling control of lines 2 and 3 of the display screen.
- In Shift mode, the M1250 console can have up to 16 trunk group busy (TGB) keys. This eliminates the need for any QMT-2 key/lamp strip add-on modules.
- An optional supporting stand that can be adjusted to 9 different positions.
- A handset and headset volume slider control, situated below the dial pad.
- A physical connection to a serial data port through a subminiature D-type female connector on the console back wall. This permits connection of the console to the serial port of a personal computer.
- An optional Busy Lamp Field/Console Graphics Module (BLF/CGM), which displays the status of up to 150 consecutive extensions (SBLF) or any group of 100 extensions within the system (EBLF) and has many text and graphics capabilities.
- An optional Attendant Supervisory Module (ASM) can be installed.
- Multi-language selection.
- Menus for local console features (Options menu) and diagnostics (Diagnostics menu).
- Code blue or emergency relay (associated with ICI 0).
- Alert tone volume and frequency selection.
- Electret or carbon transmitter support.
- Power Fail Transfer switch.

M2250 features

The M2250 has the following features:

- A four-line, 40 character, liquid crystal display (LCD) with backlighting. Power, including backlighting, is maintained during building power failures with the system's battery backup, if equipped.

  or

  A two-line, 23 character, liquid crystal display (LCD) with backlighting.
- Angle adjustment of the display screen, which can be tilted through 90° from horizontal to fully vertical.

- Scrolling control of lines 2 and 3 of the display screen.
- In Shift mode, the M2250 can have up to 20 TGB keys. This eliminates the need for any QMT-2 key/lamp strip add-on modules.
- In Shift mode, the M2250 can have up to 10 extra flexible feature keys for a total of 20.
- An optional supporting stand that can be adjusted to nine different positions.
- A handset and headset volume slider control, situated below the dial pad.
- A physical connection to a serial data port through a subminiature D-type female connector on the console back wall. This permits connection of the console to the serial port of a personal computer.
- An optional Busy Lamp Field/Console Graphics Module (BLF/CGM), which displays the status of up to 150 consecutive extensions (SBLF) or any group of 100 extensions within the system (EBLF) and has many text and graphics capabilities.
- An optional Attendant Supervisory Module (ASM) can be installed.
- Supports transmission level adjustment to meet international requirements by accepting and processing downloaded information from the system (when this messaging is supported in software). The transmission level can be adjusted to one of 16 different levels.
- Multi-language selection.
- Menus for local console features (Options menu) and diagnostics (Diagnostics menu).
- Code blue or emergency relay (associated with ICI 0).
- Time and date system download.
- Alert tone volume and frequency selection.
- Electret or carbon transmitter support.
- Power Fail Transfer switch.
- Keyclick.

Physical description

Figure 57 on page 211 and Figure 58 on page 212 show top views of the layouts of the M1250 and M2250 attendant consoles, respectively. The user-accessible components are labeled using a row/column grid arrangement. Figure 59 on page 213 shows rear, left side, and bottom views of the consoles. These illustrations show where to find the various components.

Dimensions

Dimensions of the M1250 and M2250 attendant console are as follows:

Table 1
Dimensions

Width	425 mm (16.75 in.)
Depth	245 mm (9.6 in.)
Height (front)	25 mm (1 in.)
Height (back)	65 mm (2.5 in.)
Height (with display screen panel up)	115 mm (4.5 in.)
Weight	approximately 2.75 kg (6 lbs)

Figure 57
M1250 attendant console – top view

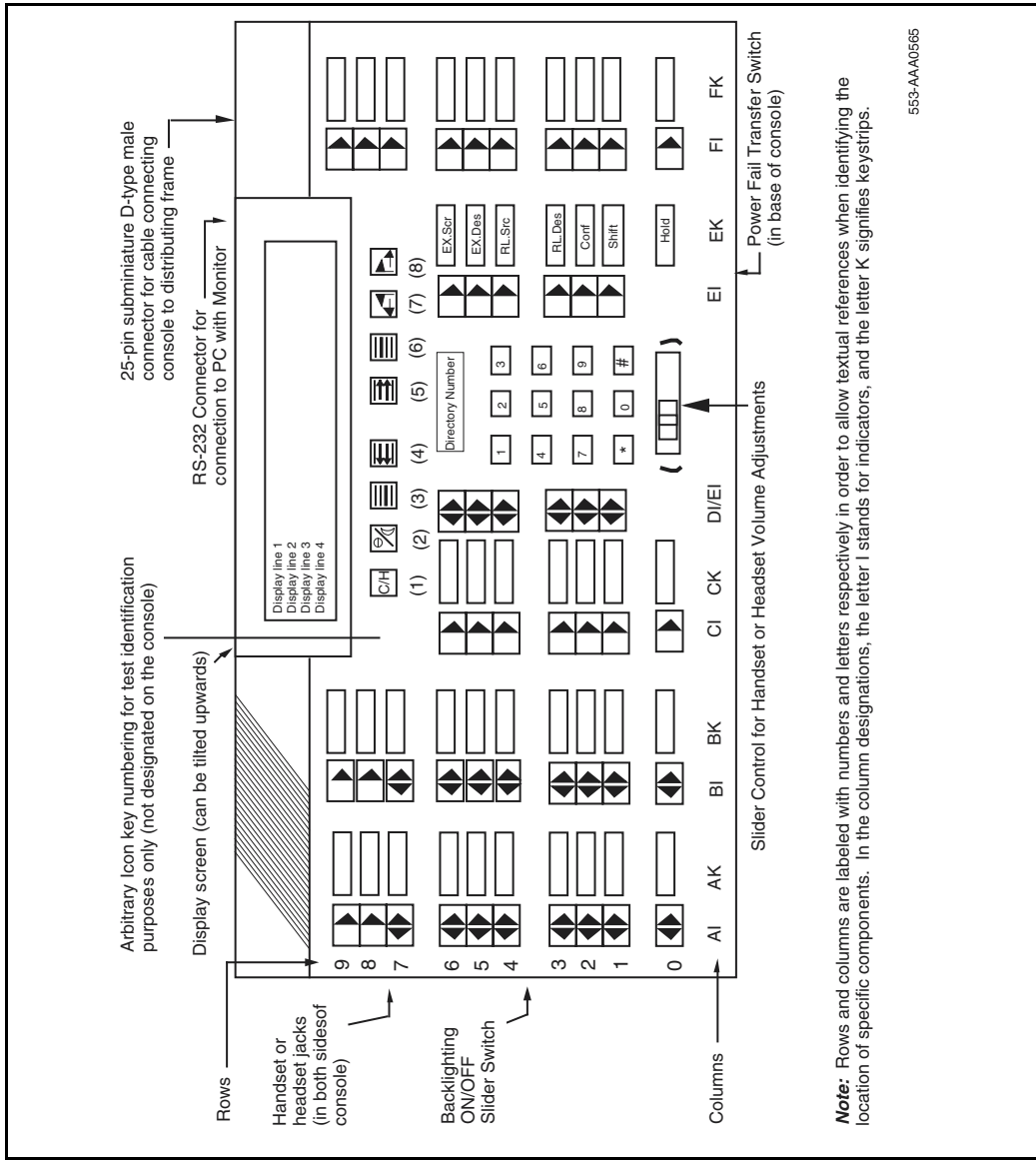

Note: Rows and columns are labeled with numbers and letters respectively in order to allow textual references when identifying the location of specific components. In the column designations, the letter I stands for indicators, and the letter K signifies keystrips.

Figure 58
M2250 attendant console – top view

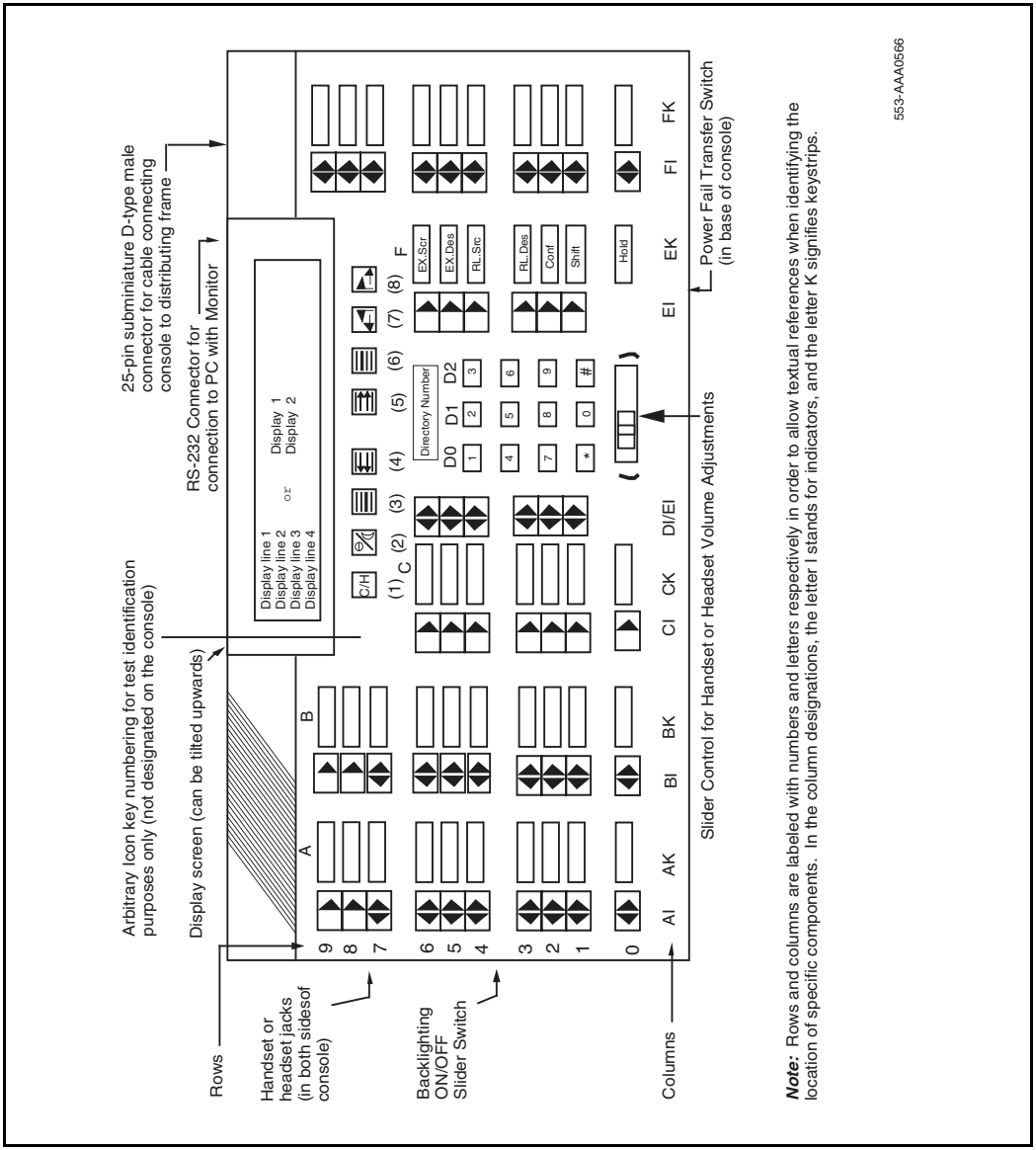

Note: Rows and columns are labeled with numbers and letters respectively in order to allow textual references when identifying the location of specific components. In the column designations, the letter I stands for indicators, and the letter K signifies keystrips.

Figure 59
M1250 and M2250 attendant consoles – rear, left side, and bottom views

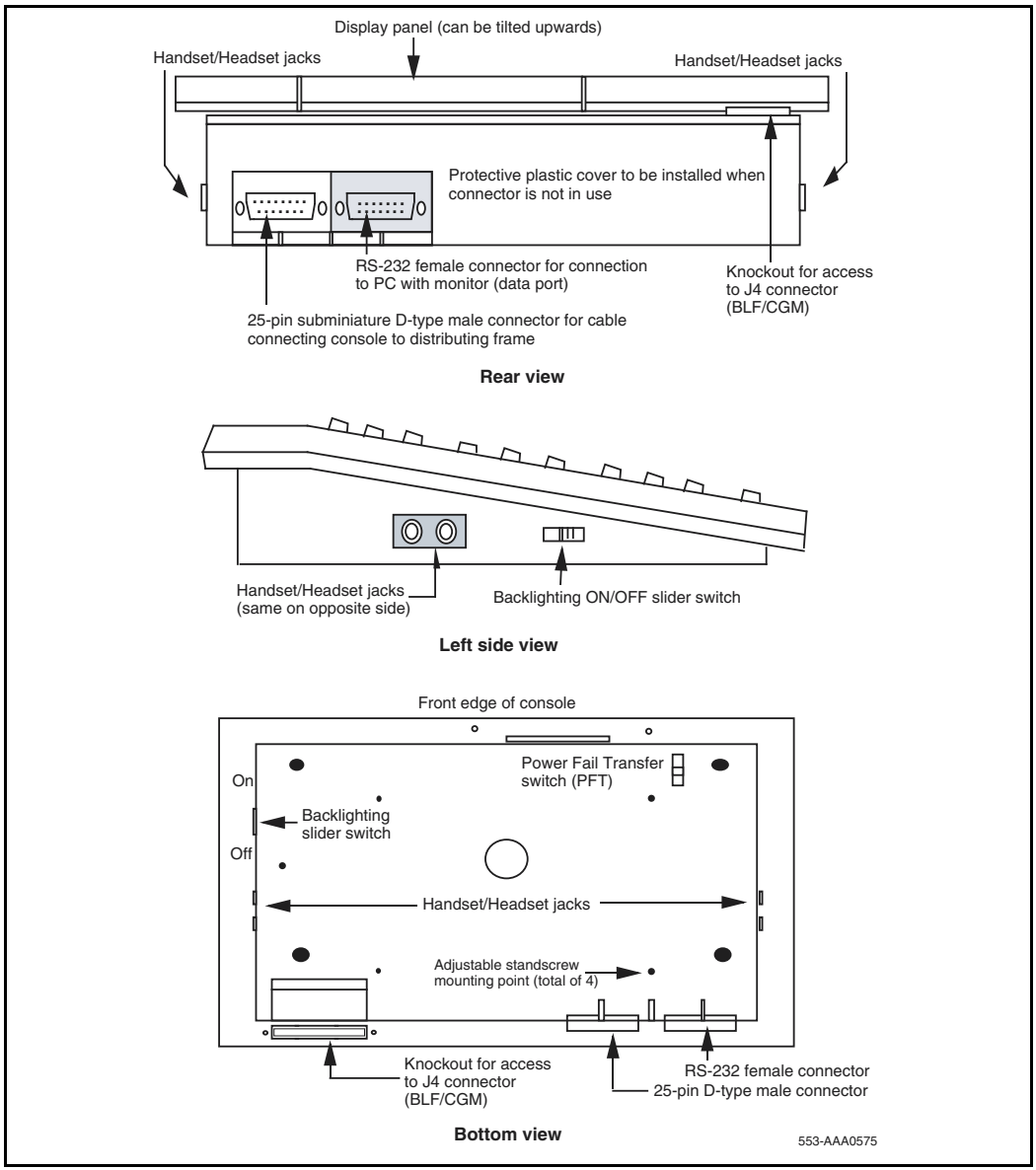

Keyboard layout

Refer to Table 31 on page 214 for the description of keys and Figures 57, 58, and 59 for the location of switches and keys mentioned in this section.

Function keys

The attendant console has eight function keys, located directly below the display screen. Refer to Table 31 for the positions, functions, and markings of these keys. For an explanation of the functions assigned to the rest of the attendant console keys, refer to “Operation” on page 244.

Table 31
Softkey definitions and functions (Part 1 of 3)

Key number (see Figures 57 and 58)	Symbol	Function
(1)	C/H	Centralized Attendant Service (CAS) File
(2)		Prime function (normal): Position Busy feature Level 1 function (Shift): Night Service feature
(3)		Prime function (normal): Selects display screen line 2 for scrolling. Level 1 function (Shift): Selects the Options menu on the display screen. Alternating between the idle and active call display (M2250 only). From the idle display, press this key to show the active call display.

Table 31
Softkey definitions and functions (Part 2 of 3)

Key number (see Figures 57 and 58)	Symbol	Function
(4)		Prime function (normal): Scrolls the currently selected line to the left. Level 1 function (Shift): Decreases the alert speaker volume.
(5)		Prime function (normal): Scrolls the currently selected line to the right. Level 1 function (Shift): Increases the alert speaker volume.
(6)		Prime function (normal): Selects line 3 on display screen for scrolling. Level 1 function (Shift): Selects the Diagnostics menu on the display screen. (On the M2250 console, the Diagnostics menu is password-protected. To display it, the user must enter a 4-digit password and press * on the dial pad.) Alternating between the idle and active call display (M2250 only). From the active call display, press this key to show the idle display.

Table 31
Softkey definitions and functions (Part 3 of 3)

Key number (see Figures 57 and 58)	Symbol	Function
(7)		Prime function (normal): Signal Source feature key Level 1 function (Shift and Conf/ Busy Lamp Field key): Used with the Busy Lamp Field/ Console Graphics Module, as CGM key.
(8)		Prime function (normal): Signal Destination feature key Level 1 function (Shift): Used with the Busy Lamp Field/ Console Graphics Module, as the Mode key.

Switches

A slider control, located below the dial pad, between columns DI/EI and FI, controls the handset and headset receive volume level. See Figures 57 and 58.

A Power Fail Transfer (PFT) switch is located in the baseplate. See Figure 59 on page 213. Both the line connector and the RS-232 connector for the PC port are located at the back of the console.

Shift key

The Shift key, mentioned earlier, is positioned in column FK, row 1, just above the Hold key. See Figures 57 and 58. It is used to access Level 1 mode functions.

Handset and headset jacks

Two pairs of jacks are provided for plugging in handsets or headsets. The jacks are located on both sides of the console beneath the faceplate in the recessed area shown by the arrows. See Figures 57 and 58. The console

accepts both carbon and electret handsets or headsets and automatically adapts itself to each type.

> ***Note:*** Electret headsets and handsets are polarity sensitive and must be correctly inserted into the jack.

LCD indicators

The LCD indicators on the M1250 and M2250 display triangular symbols that normally point towards the key with which they are associated. Certain keys in the QMT2 mode of operation and loop keys have two LCDs associated with each key instead of one.

On the M2250, every LCD can flash at 30, 60, or 120 impulses per minute (ipm). On the M1250 console, certain lamps can flash only at 60 or 120 ipm. Refer to “Operation” on page 244 for more details.

The M2250 attendant console has 10 more flexible features than the M1250 attendant console. These are programmed in LD12 and accessed using the Shift key.

Display screen messages

Source information appears on line 2 of the display screen. Destination information appears on line 3 of the display screen.

The status messages listed below appear on line 4 of the display screen panel.

— MN (minor alarm)

— MJ (major alarm)

— C/H (CAS/History File)

— CW (Call Waiting)

— BUSY (Position Busy)

— NIGHT (Night Service)

— IDLE (Idle)

— ACTIVE (lpk has been selected)

— S (Shift mode) Only on the M2250 and later releases of the M1250.

— EMERGENCY (Power Fail Transfer (PFT) feature is activated.)

The first four status messages appear as MN, MJ, C/H, and CW on line 4 of the display screen panel. BUSY and NIGHT are combined with the status of the Release lamp to indicate the console status as shown in Table .

Table 32
Release lamp indicator status

QCW-type	Indicator	Status	
Night	**Busy**	**Release**	**Display screen status (line 4)**
ON	X	X	NIGHT
OFF	ON	X	BUSY
OFF	OFF	ON	IDLE
OFF	OFF	OFF	ACTIVE
X	X	X	EMERGENCY

If the emergency power fail transfer feature is activated, the console status will be displayed as EMERGENCY.

Connections

The line cord connects to the rear of the attendant console through a 25-pin subminiature D-type connector. The jack connector is attached to the line cord for user safety and equipment protection (pins are not exposed). Having the plug connector mounted in the console also prevents interchanges between the line cord and the serial data port connectors (the serial data port in the console has a jack connector).

Identical two-prong G3 type connectors are provided on each side of the console body to permit handset or headset connection at either side of the console. The attendant console is compatible with both carbon and electret handsets or headsets. The electret handset plug is orientation-dependent and is labeled accordingly.

The M2250 attendant console is connected to the system through two digital ports (primary and secondary) with three additional ports for powering. The M1250 uses two hybrid ports (primary and secondary) for connection to the system, with two additional ports for powering.

The M2250 console requires a Digital Line Card (DLC) or an Integrated Services Digital Line Card (ISDLC) NT8D02 or later.

Local console controls

Visual contrast on the display panel can be adjusted using the Contrast option on the Options menu.

From the Options menu, four-line mode can be changed to two-line mode for easier viewing and to use larger fonts.

The pitch and volume of the buzz tone on the console can be adjusted by the user.

Any one of 15 languages (English, French, Spanish, German, Italian, Norwegian, Irish, Turkish, Katakana, P.R.C. (People’s Republic of China),

Figure 60
M2250 attendant console — rear, left side, and bottom views

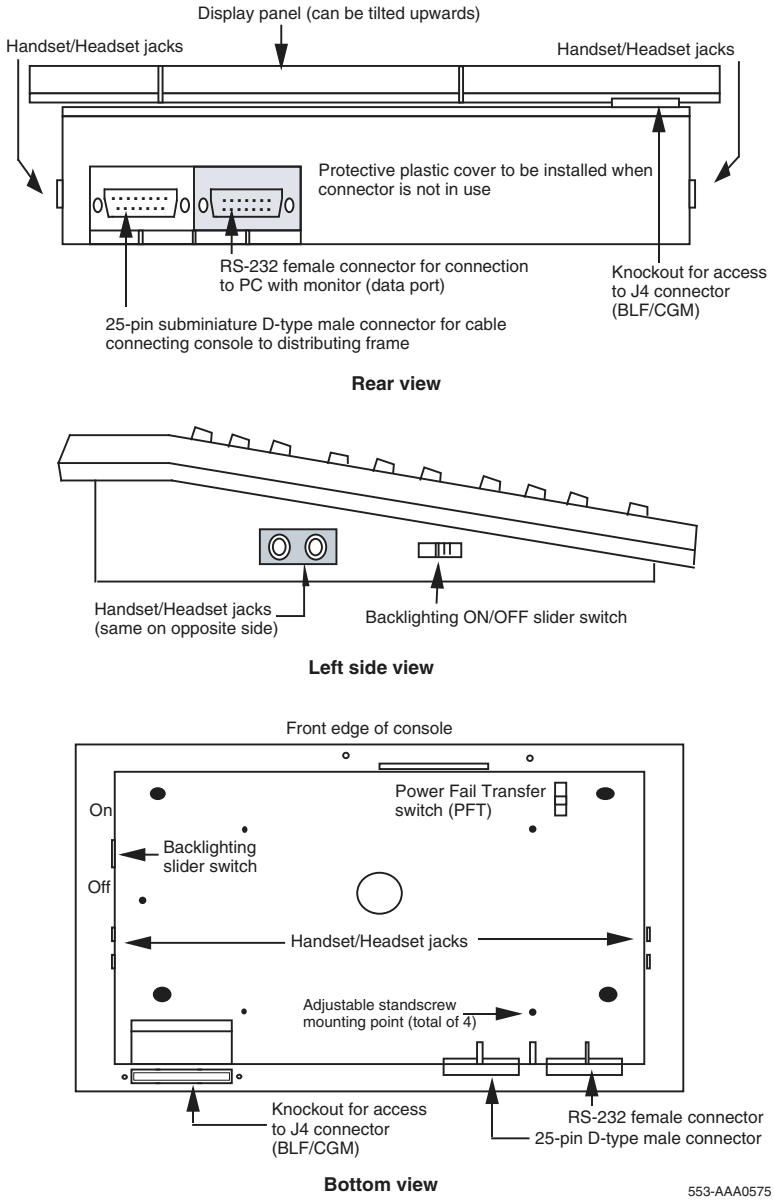

Taiwan, Korean, Polish, Czech/Slovak or Hungarian) can be chosen for the console screen displays.

When the languages P.R.C., Taiwan, and Korean are chosen, the M2250 uses two-line display.

The attendant console is equipped with a real-time clock/calendar. The time of day (hours, minutes, and seconds) and the date (day, month, and year) are displayed on line 1 of the display screen.

The sound of key clicks can be turned on or off. On the M2250, the pitch and volume of key clicks can be adjusted.

Busy Lamp Field/Console Graphics Module

The Busy Lamp Field/Console Graphics Module (BLF/CGM) can be added to an M1250 or M2250 attendant console. For more information on installation and operation of this feature, see "Busy Lamp Field/Console Graphics Module" on page 114, or refer to the *Busy Lamp Field/Console Graphics Module User Guide*.

Display backlight power supply option

An optional 16 V dc power supply (A0367601) can be installed to the MDF to improve the display backlight brightness.

Wiring

Each analog (500/2500-type) or digital telephone requires one pair of Z station wire or equivalent. Existing 16- or 25-pair connector cables can be used. Each attendant console requires a 16-pair cable terminated on an Amphenol connector.

When zone cabling and conduit are used, assign a block of numbers or letters to each zone. See Figure 61 on page 222. Allow for growth when assigning blocks of numbers.

Cable markers are normally an adhesive-backed cloth tape 1/2 inches wide by 3-1/2 inches long (15 mm by 65 mm) with preprinted numbers.

For limits and cabling for analog (500/2500-type) telephones, refer to Figure 62 on page 223.

Figure 61
NE-analog (500/2500-type) telephones – limits and cabling

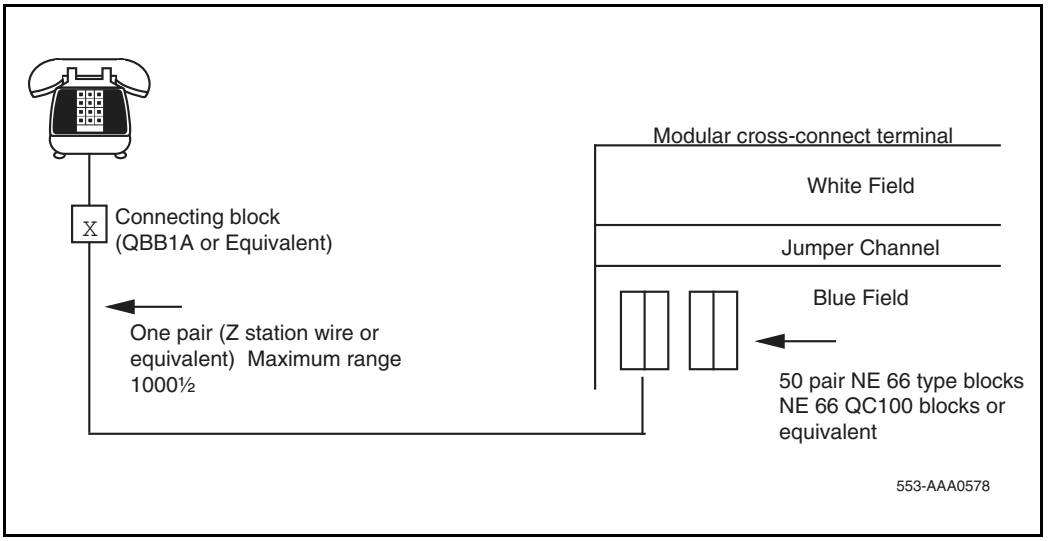

For a list of terminal connections, see Table 33 on page 224.

Installing wiring

Follow the steps in Procedure 37 install the wiring for a telephone.

Procedure 37
Installing wiring

1. Assign a number to the wire or cable used.
2. Attach the assigned number to the wire or cable at the end nearest the telephone, using a cable marker.
3. Run the wire or cable between the telephone location and nearest cross-connect point (if not previously run).
4. Connect the cable or wire to the telephone connecting block.
5. Designate the telephone connecting block.

Figure 62
Zone cabling and conduit assignment

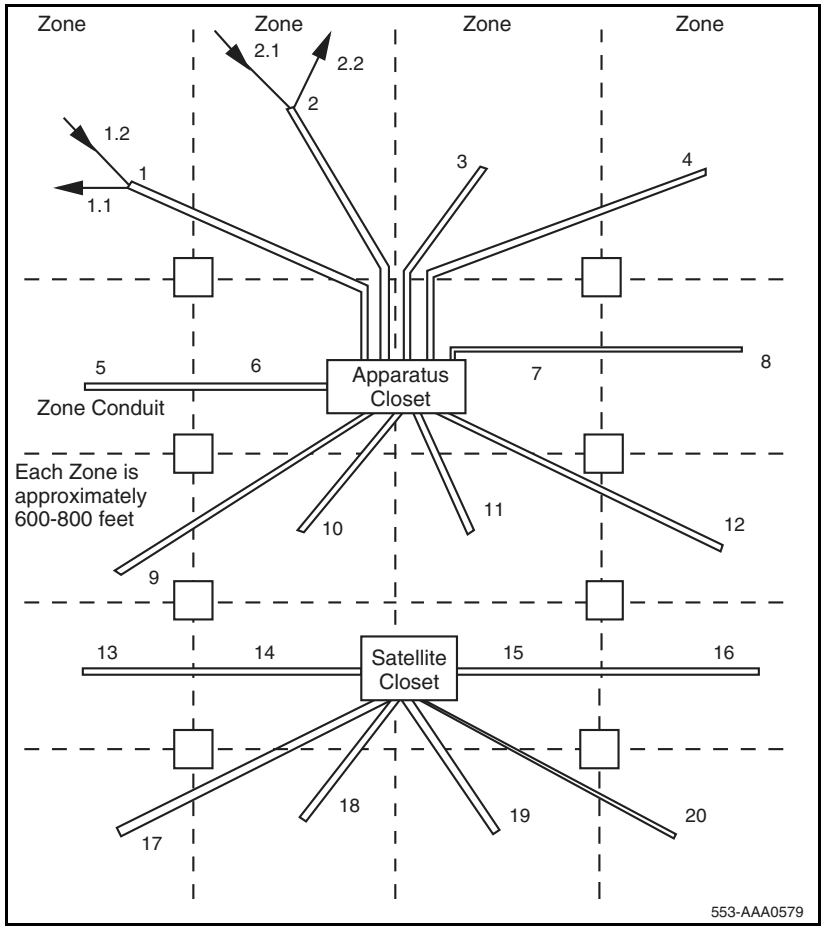

6 Cross-connect the pairs at intermediate cross-connect points (if required) and terminate at the cross-connect terminal.

7 Terminate leads at the cross-connect terminal and designate the blocks according to the house cable plan.

Table 33
Terminal connections

Connecting block Designations			Inside wiring Colors	
NE-47QA or QBB1B	**NE-284-74-500 1 adapter**	**NE-625F TELADAPT plugs and jacks**	**Z station wire**	**16/25-pair cable**
G	1T	T1 (G)	G	W-BL
R	1R	R1 (R)	R	BL-W
BK	X1	AUX (BK)	BK	W-O
Y	X2	GND (Y)	Y	O-W
5	R	T2 (BL)		W-SL
6	B	R2 (W)		SL-W

Normal operating ranges

Telephones

M2000 Series Meridian Digital Telephones have a maximum permissible loop length of 3500 ft (915 m), assuming 24 AWG (0.5 mm) wire with no bridge taps. A 15.5 dB loss at 256 kHz defines the loop length limit.

Attendant consoles

The M2250 attendant console has a maximum permissible loop length of 3500 ft (915 m), assuming 24 AWG (0.5 mm) wire with no bridge taps. A 15.5 dB loss at 256 kHz defines the loop length limit.

Installation

This section describes installation instructions for the M2250 attendant console. For Succession 1000M, Succession 1000, and Meridian 1 Attendant PC Software installation instructions, refer to *Meridian 1 Attendant PC: Software Installation Guide*.

Packing and unpacking

Use proper care while unpacking any attendant console. Check for damaged containers so that appropriate claims can be made to the transport company for items damaged in transit.

If an attendant console must be returned to the factory, pack it in the appropriate container to avoid damage during transit. Remember to include all loose parts (cords, handset, power unit, labels, and lenses) in the shipment.

Installation and removal

Use the following procedures to install and remove M2250 attendant consoles.

> ***Note:*** Although M2250 attendant consoles do not require a static discharge ground connection, the connection should be installed to protect any earlier vintage attendant consoles that may be used as replacements.

Choose a clean, level work surface and place several sheets of soft, clean paper between the attendant console and the work surface. This will prevent scratching or otherwise damaging the top cover, LCD indicators and screen, and the feature keys of the attendant console.

Installing the M2250 attendant console

Follow the steps in Procedure 38 to install the M2250 attendant console.

Procedure 38
Installing the M2250 attendant console

1. Ensure that a 16-pair or 25-pair cable equipped with a 25-pair Amphenol connector is installed at the attendant console's location.
2. Unpack and inspect the attendant console for damage. If the console is damaged, notify the supplier.
3. Designate the console according to the features provided.
4. Connect the Amphenol plug on the attendant console to the Amphenol jack coming from the Main Distribution Frame (MDF).
   - **a.** Fasten the Amphenol connectors together and secure the captive screws on the cable.
   - **b.** Ensure that the connectors are secured in a connector mounting, if provided, or to the wall. Do not leave connectors unprotected on the floor.
5. Add a line circuit for the attendant console, if not already done. Refer to *Circuit Card: Description and Installation* (553-3001-211).
6. Cross-connect the attendant console at the cross-connect terminal. See Procedure 44 on page 236.
7. Enter the related attendant console data in the system. Refer to *Software Input/Output: Administration* (553-3001-311).
8. Test the console features using the attendant console user guide.

   Note: Refer to *Circuit Card: Description and Installation* (553-3001-211) for circuit card installation procedures.

End of Procedure

Removing the M2250 attendant console

Follow the steps in Procedure 39 if it is necessary to remove an M2250 attendant console.

Procedure 39
Removing the M2250 attendant console

1. Remove related attendant console data from the system memory. Refer to the *Software Input/Output: Administration* (553-3001-311).
2. Locate and remove cross-connections from the attendant console cable at the cross-connect terminal. See Procedure 44 on page 236.
3. Remove the circuit card if required. Refer to *Circuit Card: Description and Installation* (553-3001-211).

   Note: Do not remove the circuit card if any of the remaining units on the card are assigned.
4. Disconnect the Amphenol connector on the end of the cable leading to the cross-connect terminal from the connector on the cable leading to the attendant console.
5. Pack the attendant console, handset, and cords in a suitable container.

End of Procedure

Removing the M2250 attendant console top cover

Follow the steps in Procedure 40 to remove the M2250 Attendant top cover.

Procedure 40
Removing the M2250 attendant console top cover

1. Disconnect any plugs and cords from the attendant console.
2. Remove the ten 10-mm fastening screws in the flange of the attendant console, as well as one 10-mm and one 40-mm screw on the base of the attendant console. See Figure 63 for the M2250 assembly drawing.

Figure 63
M2250 assembly drawing (exploded view)

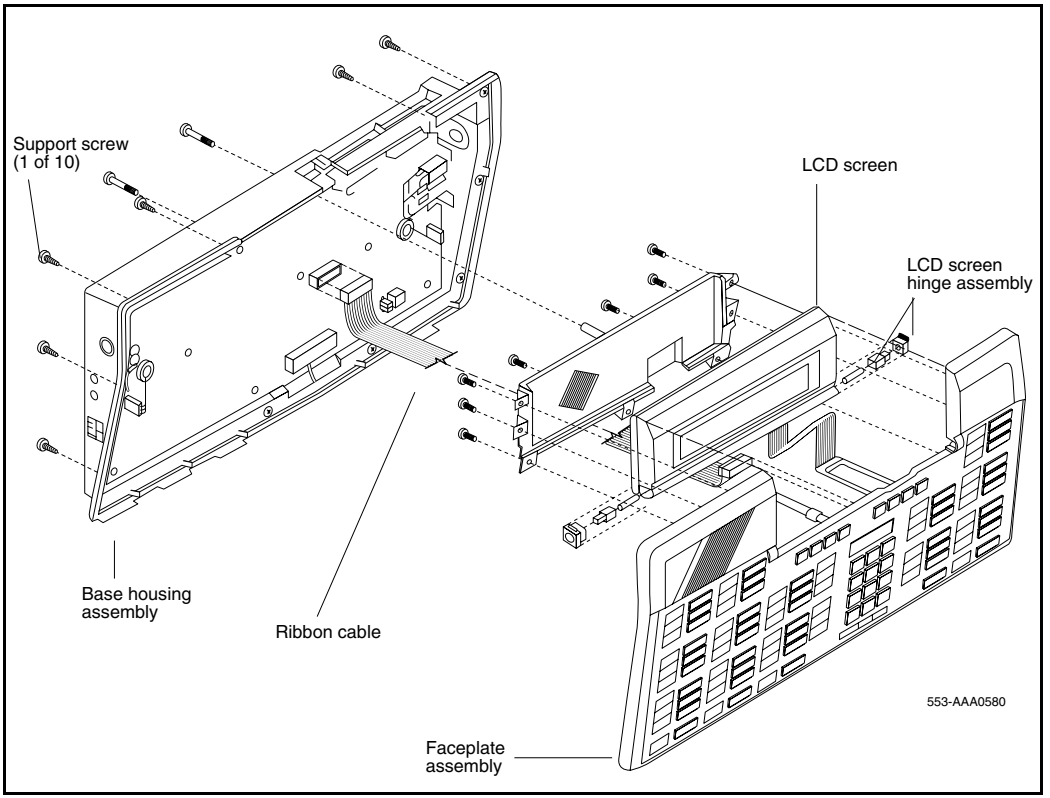

3 Holding the top cover and the base together by hand, turn the attendant console right-side up and place it back on the work surface.

4 Carefully lift the faceplate straight up and disconnect the 20-pin plug ribbon cable located at J2.

Note: On attendant consoles with a display attached to the top cover, do not connect or disconnect the cable to the display unless the attendant console line cord is disconnected.

End of Procedure

Installing the M2250 attendant console top cover

Follow the steps in Procedure 41 to install the M2250 attendant console top cover.

Procedure 41
Installing the M2250 attendant console top cover

1. Set the QMT2 dip switch. To locate the dip switch, look at the attendant console from the top. The QMT2 dip switch is the only dip switch on the topmost circuit board. Set the switch to ON (enable QMT2) or OFF (disable QMT2).

   Note: The QMT2 feature must be enabled in system software. Refer to LD 12 in *Software Input/Output: Administration* (553-3001-311).

2. Carefully lift the top cover straight up and connect the 20-pin plug ribbon cable to J2.

3. Put the top cover back on the attendant console:

   a. Place the top cover onto the base housing, and turn the attendant console upside down.

   b. Reinsert and tighten the ten 10-mm fastening screws on the flange.

   c. Reinsert and tighten one 10-mm and one 40-mm fastening screw on the back.

4. Return the attendant console to its working position, reconnect the plugs and cords, and test the features.

End of Procedure

Performing a loopback test

Follow the steps in Procedure 42 to perform a loopback test on the M2250 attendant console.

Procedure 42
Performing a loopback test on the M2250 attendant console

1. Make a loopback connector. Prepare a blank 25-way RS-232 plug by internally connecting pins 2 and 3 together with strapping wire.

2. Press the Shift key. This accesses Level 1 mode.

3 Press the F4 Function key to access the Diagnostics menu on the LCD screen.

4 Plug the loopback connector into the Data Port RS-232 jack in the back of the console.

5 Select the Data Port option from the Diagnostics menu by dialing “3”. The LCD screen displays OK when the test is successfully completed.

If there is a hardware fault on the M2250, A0H is displayed.

If the blank RS-232 connector is not plugged into the data port correctly (as described in Step 4), the display reads 90H or A0H.

6 Press the asterisk (*) key to repeat the test.

7 To exit the test mode press the octothorpe (#). to return to the main Diagnostics menu.

8 Press the octothorpe (#) to return to normal operating mode.

9 Remove the loopback connector from the Data Port RS-232 jack.

End of Procedure

Designating keys on the attendant console

Refer to the work order to determine the features and key designations for each attendant console. Designate each key on the attendant console by placing its feature name (from the designation sheet) in the key cap that fits on the key.

The Directory Number (DN) designation window on the M2250 attendant console is located above the keypad.

Follow the steps in Procedure 43 to designate keys on an M2250 attendant console.

Procedure 43
Designating keys on an M2250 attendant console

1 Remove the cap from each key requiring a designation by gently pulling upward on the cap.

2 Remove the appropriate designation from the sheet of designations.

3 Place the designation in the cap, place the cap over the corresponding key, and gently press down. Repeat this procedure for all keys requiring a designation.

4 Insert a paper clip in the hole at the left or right end of the DN designation window. Pry the window open.

5 Insert the number tag, and replace the designation window.

End of Procedure

The following figures show the typical key designations for the M2250 attendant console:

- Figure 64 on page 232 and Figure 65 on page 233 show the key designations for the M2250 attendant console in Shift mode.
- Figure 66 on page 234 and Figure 67 on page 235 show the M2250 attendant console in Unshift mode.

Figure 64
M2250 key designations in Shift mode (QMT2 not enabled)

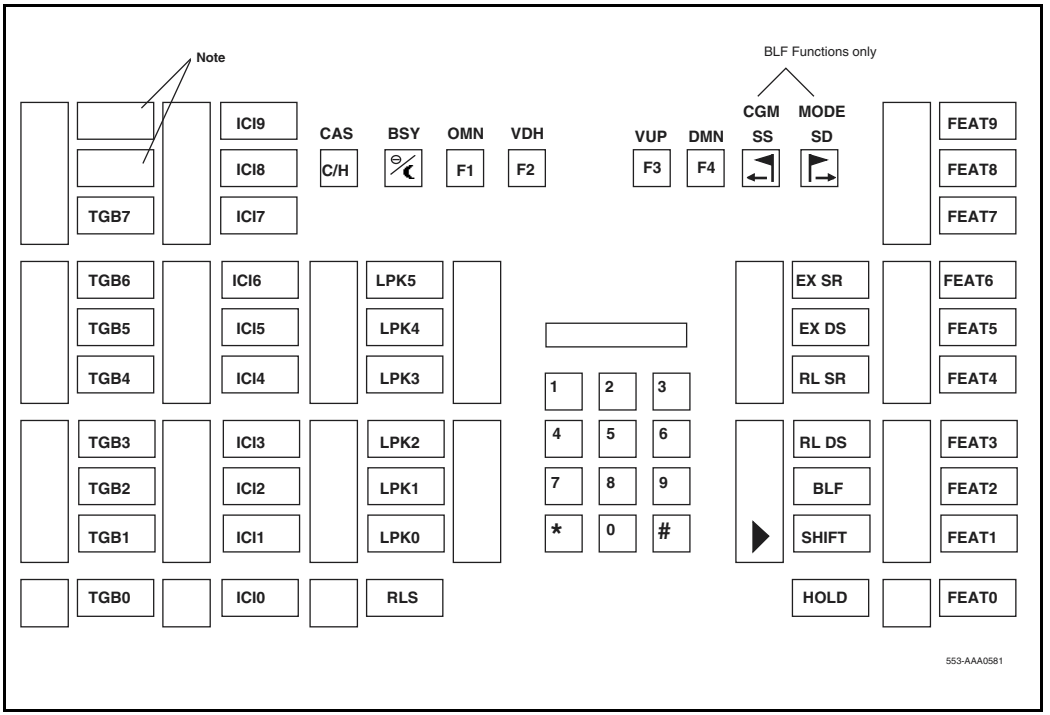

Figure 65
M2250 key designations in Shift mode (QMT2 enabled)

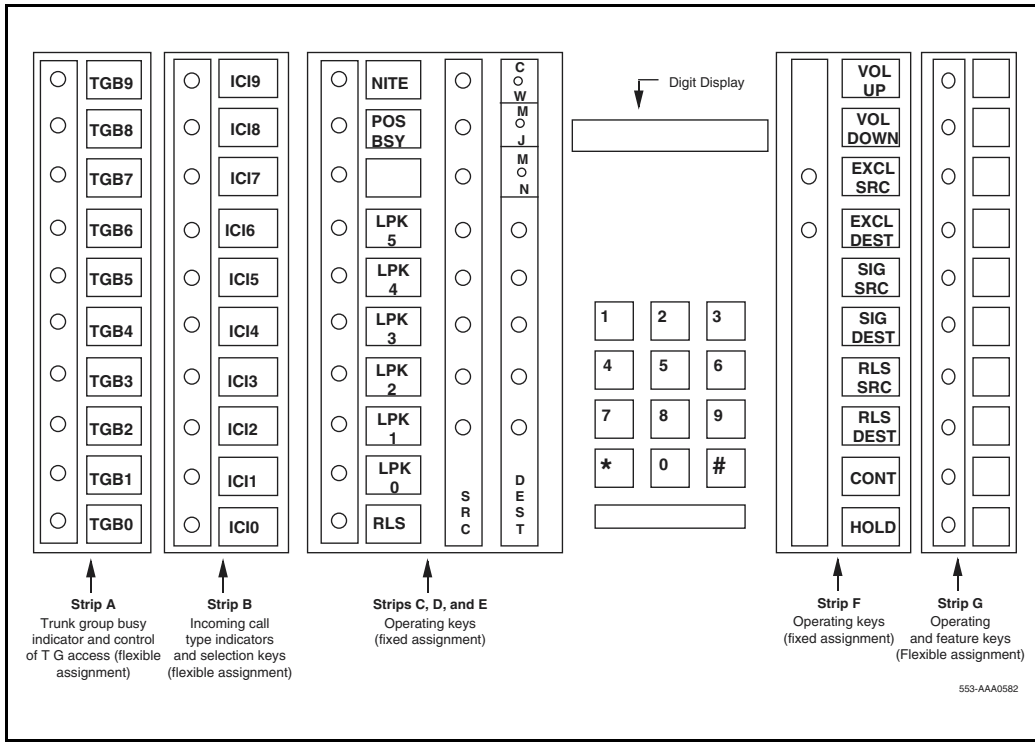

Figure 66
M2250 key designations in Unshift mode (QMT2 enabled)

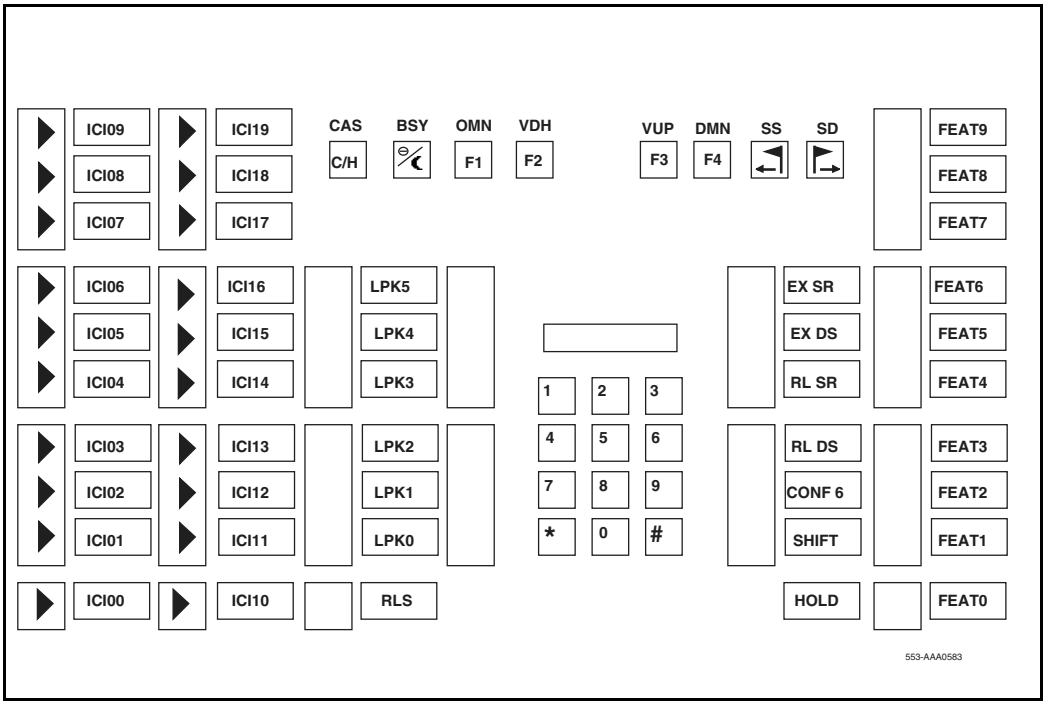

Figure 67
M2250 designations in Unshift mode (QMT2 not enabled)

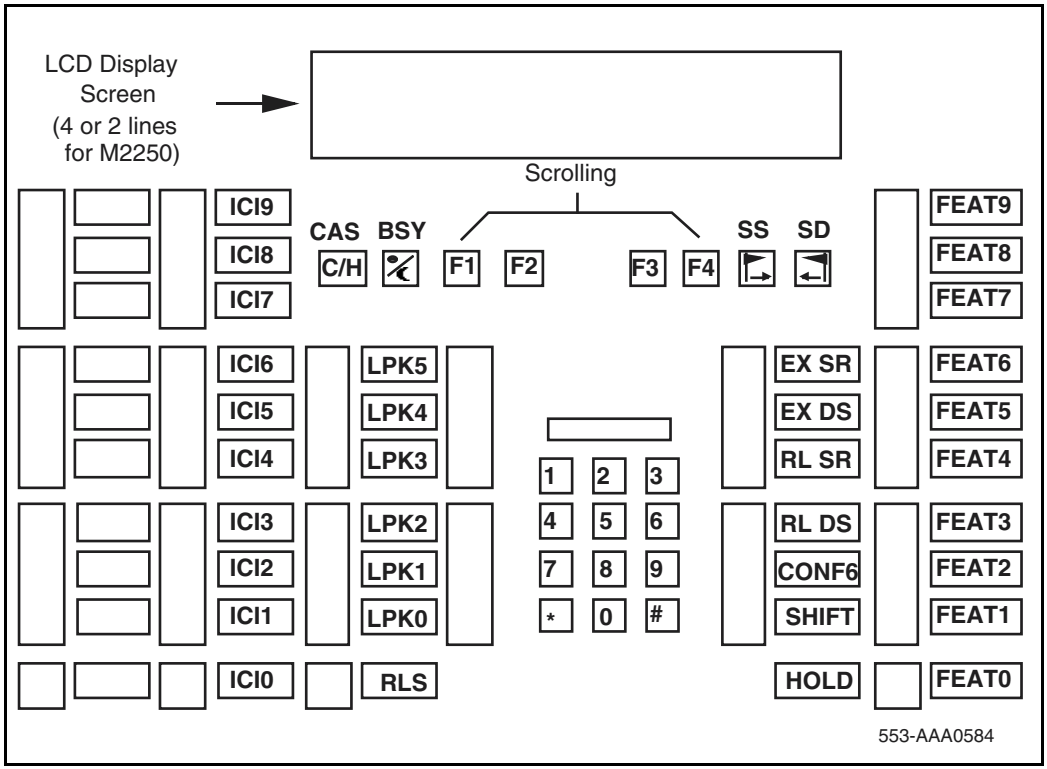

Cross-connecting attendant consoles

Terminations are located on the vertical side of the distributing frame when frame-mounted blocks are used and located in the blue field when wall-mounted blocks are used.

Line circuit card (TN) terminations are located on the horizontal side of the distributing frame when frame-mounted blocks are used and located in the white field and wall-mounted blocks are used.

Follow the steps in Procedure 44 to cross-connect attendant consoles.

Procedure 44
Cross-connecting attendant consoles

1 Locate the attendant console terminations at the cross-connect terminal.

2 Connect Z-type cross-connecting wire to the leads of the attendant console.

3 Locate the line circuit card (TN) terminations.

4 Run and connect the other end of the cross-connecting wire to the assigned TN terminal block.

End of Procedure

Refer to Table 34 for details on Z-type cross-connecting wire and Table 35 for a list of inside wiring colors.

Table 34
Z-type cross-connecting wire

Size	Gauge	Color	Designation
1 pr	24	Y-BL	Tip
		BL-Y	Ring
3 pr	24	W-BL	Voice T
		BL-W	Voice R
		W-O	Signal T
		O-W	Signal R
		W-G	Power
		G-W	Power

Table 35
Inside wiring colors

Z station wire	16/25-pair cable	Connect to equipment TN
G	W-BL	First pair Tip
R	BL-W	First pair Ring
BK	W-O	Second pair Tip
Y	O-W	Second pair Ring

Figure 68
M2250 attendant console cross-connections

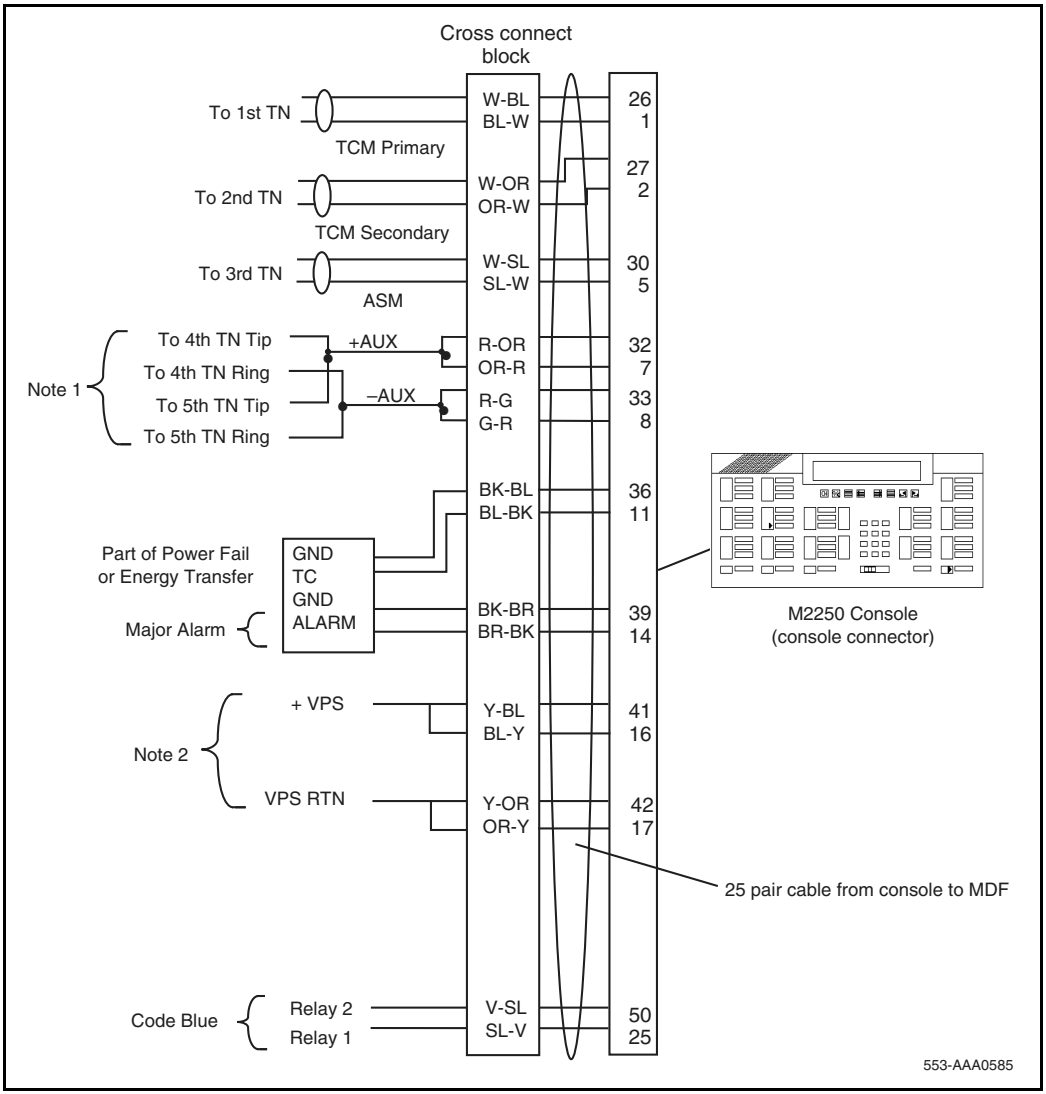

The following notes refer to Figure 68 on page 238, which illustrates the M2250 attendant console cross-connections.

Note 1: The M2250 is powered by means of the line circuits. In addition to the primary TN, secondary TN, and ASM TN, two TNs are cabled to the M2250 using the +AUX and –AUX leads. The maximum loop length is 3000 ft of 24 AWG wire.

Note 2: When additional options are used (BLF or display backlight option), an additional 16 V dc power supply is required. The 16 V dc source is cabled using +VPS and VPS RTN leads. The maximum distance from the console to the power source is 120 feet of 24 AWG wire. Please note: if both options are installed, only one 16 V dc power supply is required.

Note 3: Nortel Networks recommends that five consecutive TNs on the line circuit be allocated for each console.

Note 4: When used with the ISDLC, the M2250 requires NT8D02 or later.

Note 5: The third TN must be cross-connected to the console cable WH/SL pair whether or not an ASM (Attendant Supervisory Module) is installed. This third TN provides additional console power which is required.

Table 36 on page 240 explains where each M2250 cable pair is connected. Table 37 on page 242 lists the M2250 typical cross-connections.

Table 36
M2250 attendant console connections (Part 1 of 3)

Mounting cord	16/25-pair connector cable			
Lead designation	**Pin number**	**Pair number**	**Color**	**Connected to**
TCM primary	26 1	1T R	W-BL BL-W	TN #1
TCM secondary	27 2	2T R	W-O O-W	TN #2
Attendant Supervisory Module	30 5	5T R	W-SL SL-W	TN #3
Spare	31 6	6T R	R-BL BL-R	
+AUX	32 7	7T R	R-O O-R	TN #4
–AUX	33 8	8T R	R-G G-R	TN #5
Spare	34 9	9T R	R-BR BR-R	

Table 36
M2250 attendant console connections (Part 2 of 3)

Mounting cord	16/25-pair connector cable			
Lead designation	**Pin number**	**Pair number**	**Color**	**Connected to**
Spare	35 10	10T R	R-SL SL-R	
Power Fail or Energy Transfer	36 11	11T R	BK-BL BL-BK	GND (Note 1) TC (Note 2)
Spare Spare Spare Spare	37 12 38 13	12T R 13T R	BK-O O-BK BK-G G-BK	
GND Major Alarm	39 14	14T R	BK-BR BR-BK	GND (Note 1) ALM (Note 2)
Spare	40 15	15T R	BK-SL SL-BK	
VPS	41 16	16T R	Y-BL BL-Y	
VPS RTN	42 17	17T R	Y-O O-Y	
Spare				
Code Blue	50 25	25T R	Y-SL SL-Y	Relay 2 Relay 1

Table 36
M2250 attendant console connections (Part 3 of 3)

Mounting cord	16/25-pair connector cable			
Lead designation	**Pin number**	**Pair number**	**Color**	**Connected to**
Note 1: Connect to Pin 3 or 28 of the appropriate PFJ5 terminal block. ***Note 2:*** Connect TC to Pin 29 or 5 and ALM to Pin 4 or 31 of the appropriate PFJ5 terminal block.				

Table 37
M2250 typical cross-connections (Part 1 of 2)

Pair	Pins	Pair Color	DLC Connections	ISDLC Connections
1T 1R	26 1	W-BL BL-W	Unit 0	Unit 0
2T 2R	27 2	W-O O-W	Unit 1	Unit 8
3T 3R	28 3	W-G G-W	Unit 2	Unit 1
4T 4R	29 4	W-BR BR-W	Unit 3	Unit 9
5T 5R	30 5	W-S S-W	Unit 4	Unit 2
6T 6R	31 6	R-BL BL-R	Unit 5	Unit 10
7T 7R	32 7	R-O O-R	Unit 6	Unit 3

Table 37
M2250 typical cross-connections (Part 2 of 2)

Pair	Pins	Pair Color	DLC Connections	ISDLC Connections
8T 8R	33 8	R-G G-R	Unit 7	Unit 11
9T 9R	34 9	R-BR BR-R	Unit 8	Unit 4
10T 10R	35 10	R-S S-R	Unit 9	Unit 12
11T 11R	36 11	BK-BL BL-BK	Unit 10	Unit 5
12T 12R	37 12	BK-O O-BK	Unit 11	Unit 13
13T 13R	38 13	BK-G G-BK	Unit 12	Unit 6
14T 14R	39 14	BK-BR BR-BK	Unit 13	Unit 14
15T 15R	40 15	BK-S S-BK	Unit 14	Unit 7
16T 16R	41 16	Y-BL BL-Y	Unit 15	Unit 15

Operation

This section contains operating procedures for the M1250 and M2250 attendant consoles. The attendant console faceplate layout is shown in Figures 58 and 59 on pages 212 and 213. Use these illustrations as the basis for component location references throughout this section.

M1250/2250 configurations

The M1250 and M2250 attendant consoles can be configured to operate with the QMT2 feature, which is provided by a QMT2 add-on module incorporated in the console. Instead of having to add a keystrip unit, the technician can set a dip switch on the keyboard/controller Printed Circuit Panel (PCP) to ON (enable QMT2) or OFF (disable QMT2). It is important that the system software configuration and the QMT2 dip switch be set correctly.

For more information, refer to the section on LD15 in the following publications:

- *Features and Services* (553-3001-306)
- *Software Input/Output: Administration* (553-3001-311)

QMT2 feature disabled

When the QMT2 feature is disabled, the following conditions apply:

- If the console is not in Shift mode, keystrip AK is inactive.
- If the console is in Shift mode, the keys in strip AK function as Trunk Group Busy (TGB) keys, if configured in the system software.
- If the operator presses any of these keys, the associated trunk group is busied out.
- The triangle points aimed to the left of keystrip AK are never active.
- If the operator presses any key outside keystrip AK when the console is in Shift mode, the console performs the function associated with that key. The Shift indicator remains on.
- The keys in keystrip BK function as Incoming Call Identification (ICI) keys.

QMT2 feature enabled

When the QMT2 feature is enabled, the following conditions apply:

- If the console is not in Shift mode, the keys in strip AK and/or BK function as Incoming Call Identification (ICI) keys.
- If the console is in Shift mode, the keys in keystrips AK and BK function as Trunk Group Busy (TGB) keys. That is, they imitate the keystrips of the QMT2 add-on module as follows:
  - The LCD indicators pointing to the left indicate busy trunks.
  - The LCD indicators pointing to the right indicate incoming calls.

Attendant PC configuration

The Attendant PC Software application operates with the Attendant PC Unit. See Figure 69 on page 245. The Attendant PC Unit is typically installed under the attendant's PC monitor, and provides connection to the MDF and PC communications port. The Attendant PC Unit hardware allows the software to communicate with the system and simulate M2250 operation through a Windows 95® operating system environment. The Attendant PC Unit is configured in LD 12. Refer to *Software Input/Output: Administration* (553-3001-311) for configuration information.

Figure 69
Attendant PC Unit

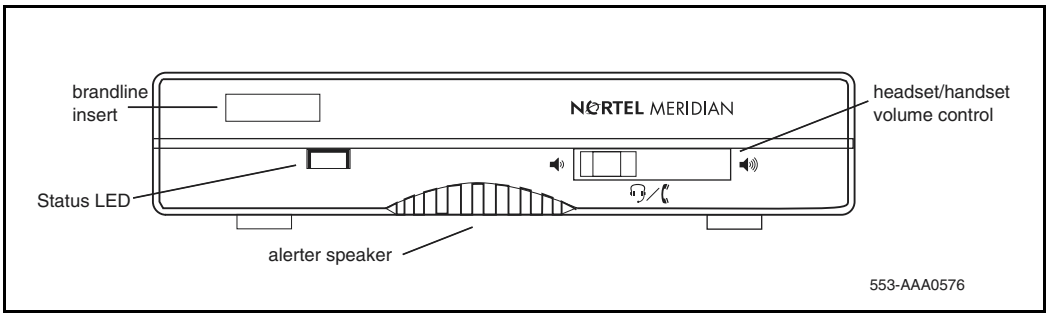

To install the Attendant PC Software, an MPC 2-compliant PC compatible Pentium system is required, with the following:

- minimum 16 MB RAM
- hard disk with at least 4 MB free disk space
- 17-inch color monitor (SVGA recommended)
- MPC-2 16 bit sound board
- Network interface adapter

For complete installation and operation instructions, refer to the *Attendant PC: Description, Installation, and Operation* (553-3001-320).

M1250/2250 feature key modes

Functions shown for some of the feature keys in Table 31 page 214 vary, depending on which console mode is in effect while the key is being pressed. Table 38 on page 247 lists the various alternate feature key functions.

When a feature key is pressed while the attendant console is in a mode other than normal or Level 1, nothing happens.

When in the normal call processing mode, access the Level 1 mode by pressing the Shift key. The LCD indicator beside the shift key lights and remains on throughout all options and menus. It goes out only upon return to normal call processing. All call processing keys that do not have a dual function perform normally while the console is in Level 1 mode. Press the Shift key again to return to normal call processing.

On early releases of the M1250 attendant console, press the pound (#) key to return from any menu on the display screen to the Level 1 mode. On the M2250 attendant console and later releases of the M1250, press the pound (#) key to exit from any submenu from the Options menu, or from the Diagnostics menu to normal operating mode. Press the Shift key to return to the Level 1 mode.

Level 1 mode also provides access to additional call processing features, as well as to options and maintenance features. One of the additional call processing features is access to Trunk Group Busy (TGB) keys that are

locked out in normal mode. For example, in normal mode, there are eight available TGB keys on the M1250 and 10 on the M2250. With QMT2 enabled, the number of TGB keys on each console is doubled.

Table 38
Softkey alternate functions

Key	Operational mode	Function
F1	Normal	Selects line 2 of the display for scrolling.
F2	Normal	Scrolls left on the selected line, at 8 characters per step.
F3	Normal	Scrolls right on the selected line, at 8 characters per step.
F4	Normal	Selects line 3 of the display screen for scrolling.
Shift, F1	Level 1	Selects the Options menu.
Shift, F2	Level 1	Turns down the alerter speaker volume.
Shift, F3	Level 1	Turns up the alerter speaker volume.
Shift, F4	Level 1	Selects the Diagnostic menu. (A password must be entered on the M2250 before the Diagnostics menu appears.)
Example:		
Press Shift and F1 (in sequence)	Options menu	The Options menu is displayed.
	Press dial pad key 1	Accesses Contrast menu. (Refer to user guide for contrast setting routines.)
	Press dial pad key #	Returns to Options menu.

M1250/2250 console diagnostics

Use the Diagnostics menu to check the functions of the console and to perform tests. To enter the Diagnostics mode, use Procedure 45. Figure 70 shows the main Diagnostics menu for the M1250 and M2250 attendant consoles.

Procedure 45
Entering the M1250/2250 Diagnostics mode

1. Press the Shift key.
2. Press the key (function key F4).
3. On M2250 consoles, enter password “9999.”
4. Press the asterisk (*) key to enter Diagnostics menu 1. To toggle between menu 1 and menu 2, press the asterisk (*) key.
5. To quit the Diagnostics mode, press the pound (#) key.

End of Procedure

Follow the procedures listed below to perform the Diagnostic tests.

Figure 70
Console Diagnostics menus

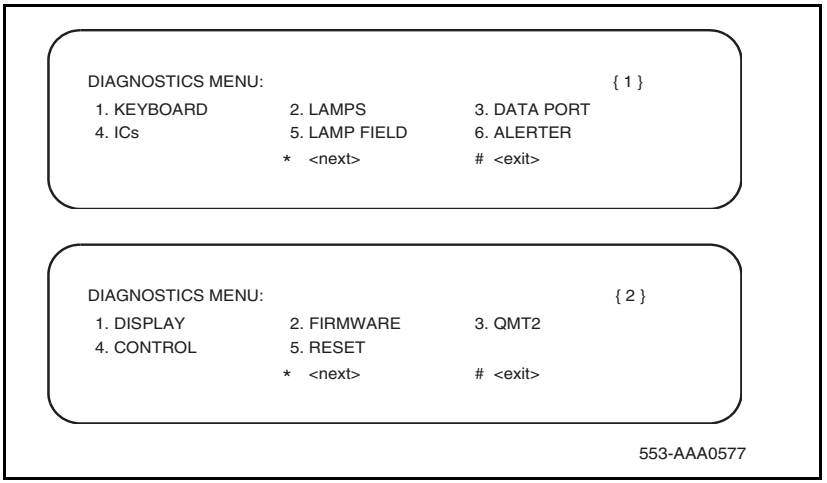

Procedure 46
Testing the Keyboard

Use this procedure to check the functionality of each key on the console. When a key is pressed, its location code is displayed within parentheses. For example, (00) denotes the upper left-hand ICI key.

1 From Diagnostics menu 1, press “1.”

2 Press any key on the console. The display shows the key’s location code, indicating that the key is functional. Table 39 shows the key location codes.

3 Press the pound (#) key to exit and return to Diagnostics menu 1.

Table 39
Key location codes for console diagnostics

		22	21	20	34		54	60	61	62		
00	10								70		80	90
01	11								71		81	91
02	12								72		82	92
03	13	23						63	73		83	93
04	14	24						64	74		84	94
05	15	25		35	45	55		65	75		85	95
06	16	26		36	46	56		66	76		86	96
07	17	27		37	47	57		67	77		87	97
08	18	28		38	48	58		68	78		88	98
09	19	29						69	79		89	99

Procedure 47
Testing the LCD indicators

Use this procedure to check the functionality of each LCD indicator on the console.

1. From the Diagnostics menu 1, press “2.”
2. Press 1 to turn all lamps ON. Press the asterisk (*) to turn each lamp OFF one by one.
3. Press 2 to turn all lamps OFF. Press the asterisk (*) to turn each lamp ON one by one.
4. Press the pound (#) to exit and return to Diagnostics menu 1.

End of Procedure

Procedure 48
Testing the data port

Use this procedure to perform a loopback test on the RS-232 port at the back of the console. Before performing the test, a connector (25-way D-plug) with pin 2 shorted to pin 3 should be inserted in RS-232 port. A failure code is displayed if any error is found.

1. From Diagnostics menu 1, press “3.” The display shows “OK” if the test is successful.
2. Press the asterisk (*) to repeat the loopback test.
3. Press the pound (#) to exit and return to Diagnostics menu 1.

End of Procedure

Procedure 49
Testing the ICS

Use this procedure to check the functionality of any peripheral devices connected to the User interface printed circuit card UIP and audio and system interface printed circuit card ASIP microprocessors within the console. A failure code is displayed if any error is found.

1. From Diagnostics menu 1, press “4.”
2. Press the asterisk (*) to perform the IC test.

3 Press the pound (#) to exit and return to Diagnostics menu 1.

End of Procedure

Procedure 50
Testing the Busy Lamp Field/Console Graphics Module

Use this procedure to check the functionality of the Busy Lamp Field/Console Graphics Module. Once in this menu, the dial pad is in CGM mode. When any dial pad keys are pressed, except the pound (#) key, the keys are echoed on the BLF/CGM Module.

1 From Diagnostics menu 1, press “5.”

2 Press keys 0 through 9 and the asterisk (*) on the dial pad. Check the CGM to see that they are echoed.

3 Press the pound (#) to exit and return to Diagnostics menu 1.

Note: For more information on installation and operation of this feature, see “Busy Lamp Field/Console Graphics Module” on page 114, or refer to the *Busy Lamp Field/Console Graphics Module User Guide*.

End of Procedure

Procedure 51
Checking the Alerter

Use this procedure to check the pitches and volume levels of the alerter and auxiliary tone channel.

1 From Diagnostics menu 1, press “6.”

2 Follow these instructions in any order:
Press key “1” to turn the buzz and auxiliary tones ON.
Press key “2” to turn the buzz and auxiliary tones OFF.
Press key “3” to increase the pitch of the buzz and auxiliary tones.
Press key “4” to decrease the pitch of the buzz and auxiliary tones.
Press key “5” to increase the volume of the buzz and auxiliary tones.
Press key “6” to decrease the volume of the buzz and auxiliary tones.

3 Press the pound (#) to exit and return to Diagnostics menu 1.

End of Procedure

Procedure 52
Testing the Display

Use this procedure to check the functionality of the alphanumeric display panel. Cycle through a number of different display patterns to check for visual defects.

1 From Diagnostics menu 2, press “1.”

2 Press the asterisk (*) to change the display screen pattern. Continue changing the pattern until all the patterns have been cycled through.

3 Press the pound (#) to exit and return to Diagnostics menu 1.

End of Procedure

Procedure 53
Displaying the firmware version numbers

Use this procedure to display the release and issue numbers of the firmware installed on the UIP and ASIP microprocessor boards.

1 From Diagnostics menu 2, press “2.” The display shows the firmware release and issue numbers, as shown below:

```
DIAGNOSTICS:   FIRMWARE
               ASIP:  XX XX
               UIP:   XX XX
```

2 Press the pound (#) to exit and return to Diagnostics menu 1.

End of Procedure

Procedure 54
Displaying and resetting the QMT2 switch status

Use this procedure to display the current state of the QMT2 dip switch inside the console and to change the setting for verification testing (LD 31). After a change, the actual switch setting will return to its original state after a time-out period of about three minutes.

1 From Diagnostics menu 2, press “3”.

2 Press the asterisk (*) to toggle between QMT2 ON and OFF.

3 Press the pound (#) to exit and return to Diagnostics menu 1.

End of Procedure

Procedure 55
Toggling control gates

Use this procedure to turn the conference bridge analog control gates, the auxiliary tone channel, and the Code Blue Relay ON or OFF. Note that the auxiliary control only affects the control gate on the ASIP board. To actually generate a tone, use the Alerter menu.

1 From Diagnostics menu 2, press “4.”

```
DIAGNOSTICS: CONTROL
1. SCR     2. DST     3. ARX     4. ATX     5. TON     6. REL
  { 0 }      { 0 }      { 0 }      { 0 }      { 0 }      { 0 }
 * <OFF>                                     # <exit>
```

2 Follow the appropriate instruction below:

Press key “1” to toggle the primary control gate between ON and OFF.

Press key “2” to toggle the secondary control gate between ON and OFF.

Press key “3” to toggle the attendant receive control between ON and OFF.

Press key “4” to toggle the attendant transmit control between ON and OFF.

Press key “5” to toggle the auxiliary tone control between ON and OFF.

Press key “6” to toggle the relay control between ON and OFF.

3 Press the asterisk (*) to turn all the control gates OFF.

4 Press the octothorpe (#) to exit and return to Diagnostics menu 1.

End of Procedure

Reset

To perform a hard reset of the console, from Diagnostics menu 2, press “5.” The reset is performed immediately. All devices and memory on the UIP and

ASIP boards are reset as if the power cord were unplugged and plugged in again.

M1250 failure codes

A failure code will appear on the display screen in response to the detection of a hardware fault. Refer to Table 40 for an explanation of failure codes and possible solutions.

Table 40
M1250 failure codes (Part 1 of 2)

Failure code	Reason	What to do
20 H	The 6818 RTC, U6, is faulty.	Unplug the line cord and plug it in again. If the failure code still appears, there is an electrical fault in the console, and it should be returned. ***Note:*** Log the failure code with the returned unit, as the code gives an indication of which component has failed.
10 H	The RAM IC, U10, is faulty.	Same as for **20H**.
08H	A key in column A is stuck.	Unplug the line cord. Free the key that is stuck. Plug in the line cord. If the failure code still appears, the console is faulty and should be returned.
09H	A key in column B is stuck.	Same as for **08H**.
0AH	A key in column C is stuck.	Same as for **08H**.
0BH	A key in column D0 is stuck.	Same as for **08H**.
0CH	A key in column D1 is stuck.	Same as for **08H**.
0DH	A key in column D2 is stuck.	Same as for **08H**.
0EH	A key in column E is stuck.	Same as for **08H**.
0FH	A key in column F is stuck.	Same as for **08H**.
C0H	The SRC micro is not responding.	Same as for **20H**.

Table 40
M1250 failure codes (Part 2 of 2)

Failure code	Reason	What to do
90H	The RS-232 port has failed the loopback test.	Check to see if the loopback connector is inserted. If not, insert it and perform the loopback test again. If the failure code still appears, turn the console off and on while the connector is inserted. Redo the loopback test. If the failure code still appears, the console is faulty and should be returned.
88H	The EPROM, U18, does not contain the correct ID, or is faulty.	Same as for **20H**.

The failure codes produced by the firmware are bit-significant, as follows:

B7	B6	B5	B4	B3	B2	B1	B0
0	USART	RTC	RAM	KEYS	c2	c1	c0*
1	SRC	BLF	RS232	EPROM	0	0	0
* Refers to key's column number.							

In most instances, the failure code accurately identifies the faulty hardware component. However, if the microprocessor is faulty, the readings may be unreliable or misleading.

Failure code 90H is always shown if the loopback test has not been performed. Refer to "Testing the data port" on page 250.

M2250 failure codes

A failure code appears on the display in response to the detection of a hardware fault.

Refer to Table 41 for an explanation of failure codes and possible solutions.

Table 41
M2250 failure codes (Part 1 of 2)

Failure code	Printed circuit pack (PCP)	Reason	What to do
40H	UIP	The PSG, U13, is not responding.	Unplug the line cord and plug it in again. If the failure code still appears, there is an electrical fault in the console, and it should be returned.
			Note: Log the failure code with the returned unit, as it gives an indication of which component has failed.
20H	UIP	The RTC, U16, is faulty.	Same as for **40H**.
10H	UIP	The RAM IC, U1, is faulty.	Same as for **40H**.
08H	UIP	A key in column A is stuck.	Unplug the line cord. Free the key if it is stuck. Plug in the line cord. If the failure code still appears, the console is faulty and should be returned.
09H	UIP	A key in column B is stuck.	Same as for **08H**.
0AH	UIP	A key in column C is stuck.	Same as for **08H**.
0BH	UIP	A key in column D0 is stuck.	Same as for **08H**.
0CH	UIP	A key in column D1 is stuck.	Same as for **08H**.
0DH	UIP	A key in column D2 is stuck.	Same as for **08H**.
0EH	UIP	A key in column E is stuck.	Same as for **08H**.
0FH	UIP	A key in column F is stuck.	Same as for **08H**.

Table 41
M2250 failure codes (Part 2 of 2)

Failure code	Printed circuit pack (PCP)	Reason	What to do
A0H	ASIP	The RS-232 has failed the loopback test.	Check to see if the loopback connector is inserted. If not, insert it and perform the loopback test again. If the failure code still appears, turn the console off and on while the connector is inserted. Perform the loopback test again. If the failure code still appears, the console is faulty and should be returned.
90H	ASIP	ASM A44#3, U1, is faulty.	Same as for **40H**.
88H	ASIP	Secondary A44#2, U2, is faulty.	Same as for **40H**.
84H	ASIP	Primary A44#1, U1, is faulty.	Same as for **40H**.
82H	ASIP	The UART, U5, is faulty.	Same as for **40H**.
81H	ASIP	The RAM, U8, is faulty.	Same as for **40H**.

The failure codes produced by the firmware in response to the detection of a hardware fault are bit-significant as follows:

B7	B6	B5	B4	B3	B2	B1	B0
0	PSG	RTC	RAM	KEYS	c2*	c1*	c0*
1	ASIP	RS-232	A44#3	A44#2	A44#1	UART	RAM

* Refers to key's column number.

Note: Bit 7 indicates whether the failure occurred on the user interface printed circuit card (UIP) (B7=0) or on the audio and system interface printed circuit card (ASIP) (B7=1).

In most instances, the failure code accurately identifies the faulty hardware component. However, if the microprocessor is faulty, the readings may be unreliable or misleading.

Failure code A0H is always shown if the loopback test has not been performed. Refer to "Testing the data port" on page 250.

Attendant console features

Time and date

On the M2250 only, the time and date are automatically downloaded from the system on power-up or console reset. To set the time and date locally on the M1250 attendant consoles, follow the procedures in Tables 42 and 43. On the M2250 console, the time and date are downloaded by the switch whenever it runs a lamp audit. Only the visual format can be changed.

Table 42
Setting the time (M1250) (Part 1 of 2)

Step	Action	Response
1	Press the Shift key.	The Shift indicator goes on.
2	Press F1 to enter the Options menu.	

Table 42
Setting the time (M1250) (Part 2 of 2)

Step	Action	Response
3	Select option 4 (set time).	The current time appears in the 24-hour format (hours: minutes: seconds).
4	To exit without changing the time, press the octothorpe (#) key.	
	To enter a new time, use the dial pad keys to overwrite the displayed settings.	When the new time is typed in, the cursor moves from position to position and then to the next entry field.
		If more than six digits are entered, the cursor returns to the hour field.
5	To put the new time setting into effect, press the asterisk (*) key.	After pressing the asterisk (*) key, the time entered is checked for correct (24-hour) format. If it is legal, the real-time clock changes to the setting entered; if it is illegal, the current real-time clock settings are redisplayed.
6	To exit, press the octothorpe (#) key.	

Table 43
Setting the date (M1250)

Step	Action	Response
1	Press the Shift key.	
2	Press F1 to enter the Options menu.	
3	Select option 5 (set date).	The current date appears in the day-month-year format.
4	To exit without changing the date, press the octothorpe (#) key.	

Table 43
Setting the date (M1250)

Step	Action	Response
	To enter a new date, use the dial pad keys to overwrite the displayed settings.	As in the new date is typed in, the cursor moves from position to position and then to the next entry field.
		If more than six digits are entered, the cursor returns to the day field.
5	To put the new date setting into effect, press the asterisk (*) key.	After pressing the asterisk (*) key, the date entered is checked for correct format. If the format is legal, the real-time clock changes to the setting entered; if it is illegal, the current real-time clock settings are re-displayed.
6	To exit, press the octothorpe (#) key.	

Trunk Group Busy indicators

Trunk Group Busy (TGB) indicators show the status of each group of trunks. If a TGB indicator is on steadily, the attendant has busied out all trunks in that group by pressing the Shift key plus the TGB key. If a TGB indicator is flashing, all the trunks in that group are actually busy.

In Supervisory mode, TGB indicators show the status of other consoles in the customer group. If the indicator is off, the attendant position is in a Position Busy mode. When an indicator associated with a particular attendant is on, the attendant is available to service calls.

> ***Note:*** The M2250 attendant console must be equipped with the Attendant Supervisory Module (NT7G10AA) to allow attendant supervision.

Incoming Call Indicators

Incoming Call Indicators (ICIs) display the various types of incoming calls presented to the attendant console. They also indicate the number of calls, and the length of time calls have been queued.

- If the indicator is on, one call has been queued for less than a certain length of time (as defined by software).
- If the indicator is flashing, one call has been queued for more than the defined length of time, or there is more than one call in the queue.

Night service/busy

When the Shift key is off, pressing the Busy key puts the attendant console into Position Busy mode. When the Shift key is on, pressing the Busy key puts the console into Night Service mode. To return to normal operating mode, press the Busy key again.

In a multiconsole system, activating Night Service mode will busy out all attendant consoles in the system.

Enhanced Night Service

This feature allows Public Network (Central Office [CO], Direct Inward Dial [DID], Foreign Exchange [FEX], and Wide Area Telephone service [WAT]) trunks to be assigned to specific Directory Numbers (DN) during Night Service.

With this feature each customer will be able to assign Public Network trunks to one of nine Night Groups. Each Night Group will allow the customer to define up to nine Night DNs. During Night Service incoming calls will be routed to one of the Night DNs defined for the group. The actual DN the call will be routed to is determined by the Night Service Option number selected at that time.

The customer will also be able to define whether Night Call Waiting tone will be given to Night stations. With Night Call Waiting tone allowed, busy Night stations are notified when an incoming call is terminating on them. The incoming call will be queued on the Night station until it becomes idle. When the Night station becomes idle, the incoming call will be presented.

This enhancement allows incoming DID trunks to be queued against busy Night stations, thereby making the operation of the DID trunks the same as for all other Public Network trunks.

Attendant Blocking of DN

The Attendant Blocking of DN (ABDN) feature enables the attendant to block a DN for a telephone from receiving or making calls. This is particularly useful when a caller dials the attendant DN and requests an external (long distance) call. If the caller chooses to disconnect until the attendant successfully places the call, the requesting DN becomes idle and can receive or make calls. Therefore, the requesting DN could be busy when the attendant establishes the requested call.

To prevent the requesting DN from being busy when the requested call is completed, the attendant can block the DN from making or receiving calls. To callers attempting to contact the blocked DN, the line appears busy. To a caller attempting to use the blocked DN, the line is connected to the attendant.

When the attendant completes the external call, the attendant can call the blocked DN and extend the call. This feature applies to both stand-alone and ISDN network environments.

The Attendant Blocking of DN feature is available on the M2250 and M1250 attendant consoles. It is not valid on M2616 telephones used as attendant consoles.

Attendant and Network Wide Remote Call Forward

This modification to the Remote Call Forward feature (RCFW) allows a user to program a call forward Directory Number from any attendant console or station throughout the network. An RFW key on the attendant console allows an attendant to view any station's call forward status and to activate or deactivate call forward for a station.

Refer to *ISDN Primary Rate Interface: Features* (553-3001-369) for further details.

Network Attendant Services

This feature allows attendant services to be distributed anywhere within a Meridian ISDN network. If, at the time of an attendant request, attendant services are not available at a station's local node, connection to an attendant at a remote node takes place. Call treatment is the same as for a connection to a local attendant node.

Call processing

The attendant answers an incoming call by pressing the flashing loop key.

To answer a specific type of incoming call, press the ICI key next to the appropriate ICI indicator. This removes the call from the queue and presents it to the attendant.

ICI key assignments

An ICI key may be assigned more than one call type. Refer to *Software Input/ Output: Administration* (553-3001-311). If the Attendant Call Party Name Display (ACPND) feature is equipped, all incoming calls are displayed by calling party name or external call source. Examples of possible ICI key assignments and displays are given in the following listing.

- **Attendant Intercept** indicates that a call is being made by a station to a facility to which that station is restricted, and the call has been routed to the attendant console.
- **Listed Directory Numbers (maximum four)** indicates that a call is being made to an attendant console associated with one of the listed directory numbers.
- **Dial 0** indicates that a station that is not fully restricted has dialed 0.
- **Fully Restricted Station** indicates that a fully restricted station has dialed 0.
- **Foreign Exchange** indicates that the incoming call is from a foreign exchange.
- **Wide Area Telephone Service** indicates that the incoming call originated at a wide area telephone exchange.

- **Recall** indicates that a camped-on call or a call extended to an idle station has not been answered for 30 seconds or that a station is recalling the attendant.
- **Call Forward** indicates that the call is being forwarded to the console from a station within the system.
- **Tie Trunk** indicates that the incoming call is on a tie trunk.

Operating keys

The operating key/lamp strips CI/CK, DI, EI, and FI/FK allow the attendant to process calls from the console.

Key/lamp strips CI/CK and FI/FK have permanently assigned functions as given in the following list.

- **Release** allows the attendant to release a call presented to the console. When the LCD associated with the RLS key is lit, it indicates that no incoming calls are being presented to the console.
- **Loop Keys/Lamps** allow the attendant to answer and originate calls from the console. The first call in the incoming queue is automatically presented to an idle loop key. Subsequent calls are queued and presented to a loop key when a loop becomes idle. Call selection is made by pressing the required ICI key. This action causes the call, which was automatically presented to the loop key by the system, to be replaced by the selected incoming call. In all cases, when the loop key is pressed, all ICIs go dark except the one associated with the call presented to the loop key.
- **Position Busy** enables the attendant to put the console in Position Busy mode. All calls directed to a console in Position Busy mode are redirected to a free console in multiconsole installations or to the night connection in single console installations. When a console is in Position Busy mode, “BUSY” is shown on line 4 of the display.
- **Night Service** permits incoming calls to the attendant to be routed to a preselected station. The Night Service key enables the attendant to assign the Night Directory Number (DN) and to initiate Night Service. When assigning the Night Service DN, “NIGHT” flashes on line 4 of the display. When Night Service is on, “NIGHT” appears without flashing on the display.

- In a multiconsole system, activating Night Service will busy out all attendant consoles in the system.
- **Hold** allows the attendant to hold an active call at the console while serving other calls.
- **Conference** permits the attendant to set up a conference of up to five conferees plus the attendant.
- **Release Destination** allows the attendant to release the called party from a call held at the console while holding the calling party.
- **Release Source** allows the attendant to release the calling party from a call held at the console while holding the called party.
- **Signal Source and Destination** allows the operator to recall either party to a call held on the console.
- **Exclude Destination** excludes the called party from an established call held at the console, allowing the attendant to speak privately with the calling party.
- **Exclude Source** excludes the calling party from an established call held at the console, allowing the attendant to speak privately with the called party.

Feature keys

Any of the keys on keystrip FK can be assigned any of the optional features in the list that follows except the Barge-In and Busy Verify features. These require five LCD indicator states (off, on, and flash at 30, 60, or 120 impulses per minute). If Barge-In or Busy Verify is required, it must be assigned to keys FK-0 and FK-1.

All other features may be assigned to any of the keys on strip FK. Refer to *Software Input/Output: Administration* (553-3001-311) for additional information. The following are some of the more common feature keys:

- **Attendant End to End Signaling** enables the attendant to send dual tone multifrequency (DTMF) signals to either the source or destination party.
- **Busy Verify** allows the attendant to confirm that a station returning a busy signal is actually being used.

- **Barge-In** allows the attendant to enter an established trunk connection for the purpose of talking to one or both parties.
- **Paging** allows access to a public address facility.
- **Speed Call** allows numbers to be dialed automatically by pressing the SPEED CALL key and dialing a 1- or 2-digit code.

Call Waiting indicator

The Call Waiting indicator indicates that there is a queue of calls to be answered. When one or more calls are waiting, “CW” appears on line 4 of the display. The CW display changes from steady to flashing when waiting calls exceed a certain number or when a call has been waiting longer than a specified time.

The maximum number of waiting calls and the maximum hold time for each waiting call to be answered can be set with a data administration task. Refer to *Features and Services* (553-3001-306) for more information.

An optional buzz is available to indicate when the first call enters the queue. The number of waiting calls can be viewed on the LCD screen by pressing a key assigned on the attendant console. On the M2250, the number of waiting calls can be displayed continuously on line 4 of the display, if defined in LD15 and selected from the Options menu.

Alarm indicators

Alarms appear on line 4 of the display. “MN” indicates a minor alarm condition; “MJ” indicates a major alarm. A minor alarm is an indication of a minor system failure affecting a limited number of lines or trunks. A major alarm indicates that Emergency Transfer may have been initiated. See “Emergency Transfer” on page 266.

Emergency Transfer

If a major equipment or power failure halts local call processing, preselected CO trunks are automatically connected to preselected stations (predetermined and hard-wired at installation time) through relays in the system. Emergency Transfer can also be activated manually by a switch underneath the attendant console.

If the switch is activated while the console has power, the word "EMERGENCY" appears on line 4 of the display.

Attendant Administration

Attendant Administration is an optional feature that allows the attendant to modify some of the features assigned to selected telephone sets within the attendant's customer group. The attendant can enter a special program mode with an assigned key.

Once in the program mode, the console key/lamp strips have different functions from those during normal call processing. A plastic overlay can be placed over the console keyboard to identify the altered key functions. Refer to *Features and Services* (553-3001-306) for Attendant Administration description and operating procedures.

Collect Call Blocking

The Collect Call Blocking feature enables a system administrator to block long distance collect call service calls on incoming Direct Inward Dialing (DID) and Public Exchange/Central Office trunks (analog or DT12).

Under the following conditions, the system sends a special answer signal to the Central Office to indicate that collect calls cannot be accepted:

- The Collect Call Blocking (CCB) package 290 is enabled.
- The incoming route has CCB enabled via the CCB prompt in the Route Data Block.
- The call is answered by a CCB user (that is, Collect Call Blocking Allowed Class of Service or option).

Classes of service and prompts are provided which enable administrators to inhibit specific users from receiving collect DID and Central Office calls. These can be configured for the following:

- PBX and BCS through the Collect Call Blocking Allowed/Denied (CCBA/CCBD) option
- Attendant and Network Alternate Route Selection calls on a per customer basis through CCBA/CCBD option
- Automatic Call Distribution (ACD) queues through the CCBA prompt

- Direct Inward System Access (DISA) through the CCBA prompt
- Tandem calls dialed with Coordinated Dialing Plan (CDP) (Trunk Steering Code, Distant Steering Code) through the CCBA prompt
- Tandem non-CDP calls through the CCBA prompt in the Route Data Block from the outgoing trunk route

When a call is answered by a CCB user, the system sends the CCB answer signal in place of the regular signal for incoming DID/CO calls from the routes with CCB enabled. If the call is a collect call, The CO will disconnect the call.

Alarm Management

The Integrated Alarm Management feature is a series of subfeatures which improve the handling of key alarm messages generated by the system and its Application Processors.

It also clarifies existing alarm messages and makes Attendant Console alarm lamp signals more meaningful. The system has three levels of alarm: critical, major, and minor. The Attendant Console alarm lamp will light when critical alarms occur.

Digital Trunk Interface – CIS

The CIS DTI trunk feature provides connectivity between the system and digital trunks used in the Commonwealth of Independent States (CIS).

The CIS 2 Mbps DTI feature enables the system to connect digital DID/COT trunks to a CIS Local Central Office and to a CIS Toll Exchange (through Local CO and Public Network, or directly for incoming toll call connections). This link supports DID/COT trunking types, and requires that the system be equipped with at least one CDTI2/CSDTI2 digital trunks pack, as well as associated software.

DPNSS Executive Intrusion

Executive Intrusion (EI) allows an originating party to break into an established call between two other parties (the wanted and the unwanted parties) under certain circumstances. If intrusion succeeds, a conference takes

place on the wanted node between the originating, wanted and unwanted parties.

EI succeeds in breaking into the call based on comparisons between the Intrusion Capability Level (ICL) of the originating party and the Intrusion Protection levels (IPL) of the wanted and unwanted parties.

The system provides Executive Intrusion from Attendant Consoles. Executive Intrusion from Telephone Sets is not supported. However, a Meridian 1, Succession 1000M, or Succession 1000 PBX will accept an EI activation request from an ordinary set on a third party PBX.

Attendant Monitor

Attendant Monitor is a customer-defined option which allows the attendant to monitor – in listen only mode – any established call involving a set or trunk on the customer with or without the connected parties being aware that monitoring is taking place (depending on the configuration of the customer tone option).

The differences between the existing Busy Verify and Barge-in features and the Attendant Monitor feature are the following:

- Attendant Monitor provides a listen only path for the attendant.
- There is no click sound given to the connected parties upon Attendant connection when the no tone option is configured.
- The tone to the connected parties may or may not be given depending on the customer tone options for Attendant Monitor.
- The display (if there is one) on any of the parties involved in the calls does not indicate that the Attendant is monitoring.

Busy Verify and Barge-in Enhancement

Attendant Monitor changes the operation of Busy Verify and Barge-in slightly. Tone is now configurable. Busy Verify and Barge-in restrictions relating to the Warning Tone Allowed/Denied class of service apply to Attendant Monitor as well.

Attendant Forward No Answer

Attendant Forward No Answer allows two enhancements to existing operations. The first enhancement permits calls presented to the attendant to forward to a second attendant or the night DN when a customer-defined time expires. The second enhancement allows DID or CO calls to any set during night service to disconnect if not answered within a predefined number of ring cycles.

Attendant Forward No Answer is selectable on a customer basis, and is included in the package 134, AFNA.

Semi-Automatic Camp-On

Semi-Automatic Camp-On is an option to the current camp-on operation. When the party to which a call is camped-on becomes free, the attendant is recalled first instead of the wanted party being rung immediately. The modification is implemented under the Semi-Automatic Camp-on (SACP) package.

When an external call is camped on to a busy DN by an attendant or a set, the called party receives a buzz (for SL1 sets) or a burst of tone (for 500/2500-type sets) indicating camp-on. Without SACP, if the called party becomes idle within a customer-defined time, the camped-on call rings the station immediately.

With SACP, if the called party becomes idle, the camped-on call recalls the attendant instead of ringing the called party. The called party meanwhile is kept busy from receiving any calls (but is still able to originate calls).

A programmable key, the Semi-Automatic Camp-on Recall (SACP) key is included with the SACP feature.When a recall is presented to the console, the RECALL ICI lamp and the SACP lamp light up. After answering the recall from the calling party, the attendant can ring the called party by pressing the SACP key. The attendant can then hold the call on the console, or release the call as usual.

When the attendant tries to present the call (after it has recalled to the attendant) to the wanted party, this party may have originated another call. In that case, the attendant receives the indication that the set is busy, and can

then camp-on the call again or release it, as usual. On a second camp-on, the attendant must activate the SACP feature again, if needed.

The SACP feature is active either for all camped-on calls or on a per-call basis depending on the customer option. When the per-call basis is chosen, the attendant activates the feature by pressing the SACP key before camping-on the call. If the SACP key is pressed twice, the associated lamp goes dark, and the SACP feature becomes inactive for the call.

Series Call

The Series Call feature causes a source call (either an attendant-answered incoming call, or an attendant-originated trunk call), that has been extended to an internal destination party, to be recalled to the attendant when the destination party hangs up. The attendant can then send the source call to another destination party. This feature enables a caller to talk to more than one party without having to disconnect and call again. Recall to Same Attendant must be allowed, otherwise the recall is routed to the first available attendant. This process can be repeated for as many destinations as requested by the caller.

A Series Call is canceled if one of the following occurs:

- the attendant presses the SECL key while the associated lamp is lit
- the attendant extends the source to a trunk while the SECL lamp is lit
- the attendant enters Night Service after extending the call and prior to receiving the recall
- the destination is call forwarded to a trunk
- the source disconnects

Powering and reset

After a power failure or a temporary corruption of data, the M1250/2250 attendant console is reset automatically.

If a permanent fault condition is detected, the console enters the maintenance mode (Position Busy), and a failure message is displayed on the LCD screen.

Note 1: The failure code format is XXH, where XX is a two-digit hex-code indicating where the fault has been detected. Refer to Tables 40 and 41 for explanations of the failure codes.

Note 2: When the BLF/CGM is attached to the console, an additional 16 V unregulated power source is required.

M2317 telephone

Contents

This section contains information on the following topics:

Introduction

The M2317 Telephone can provide simultaneous voice and data communications. It connects to the system using digital transmission. The M2317 Telephone is intended for professionals and managers, and secretaries in group answer positions. It interfaces with the system through the Digital Line Card (DLC). It is connected to the switching equipment through a two-wire loop carrying two independent 64 kb/s Time Compressed Multiplex (TCM) channels with associated signaling channels. One of the two TCM channels is dedicated to voice, and the other to data traffic.

The M2317 telephone has the following features:

- A built-in, two-line (40 characters per line) Liquid Crystal Display (LCD) screen and integrated Handsfree.
- A telephone line cord and the handset cord equipped with standard modular connectors at each end, that enables quick replacement when required.

The M2317 Telephone is equipped with a microphone and speaker to permit Handsfree operation. Figure 71 shows the M2317 Telephone.

Figure 71
M2317 Telephone

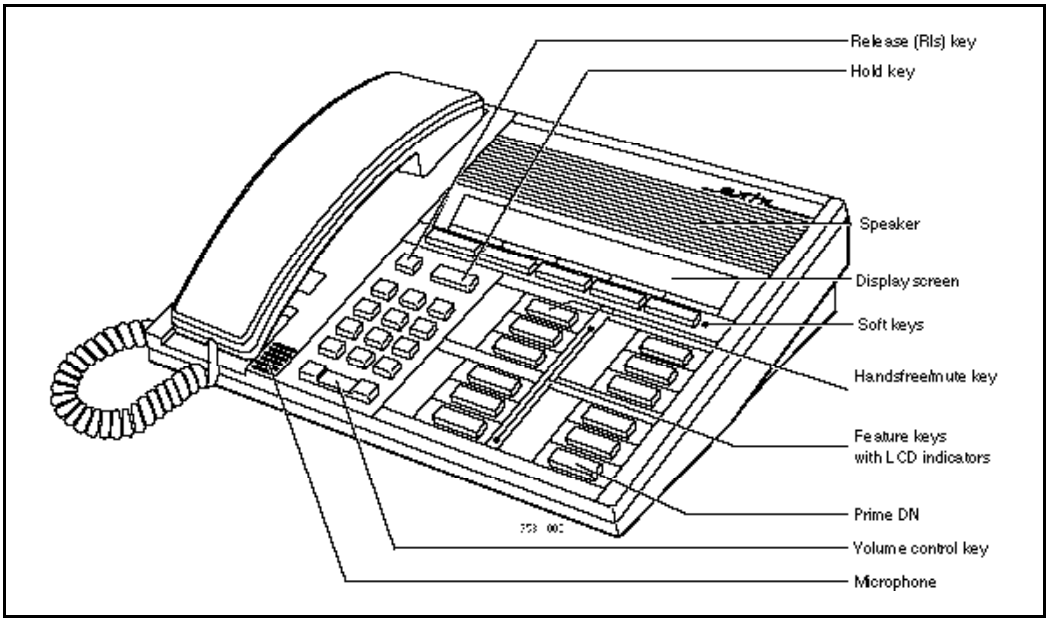

Feature description

Firmware features

Firmware is chip-dependent and cannot be changed or altered on site. As a general rule, all firmware is on ROM microchips. Firmware is built into the M2317 telephone and the Succession 1000M, Succession 1000, and Meridian 1 systems.

Firmware functions

The following functions are performed by firmware in the M2317 Telephone:

- Predial

- Last Number Redial
- Saved Number
- Redial Saved Number
- Timer
- Time and Date
- Call Processing

Software features

Downloading

All information related to the programmable keys must be downloaded into the M2317 RAM memory through the DLC.

Softkeys are automatically defined for the telephone based on COS, data base or package restrictions. Softkeys work only in conjunction with the LCD display screen.

Table 44
M2317 data features (Part 1 of 2)

Data features	M2317	DTE Keyboard
Ring Again	X	X
Speed Call	X	X
System Speed Call	X	X
Display		X
Call Forward	X	
Call Transfer (Note)		X
Autodial	X	X
Last Number Redial	X	
Save Number	X	

Table 44
M2317 data features (Part 2 of 2)

Data features	M2317	DTE Keyboard
Redial Saved Number	X	
Manual modem pooling using keyboard dialing requires only call transfer to be defined. The Data DN must always be assigned to feature key 10.		

Physical description

The M2317 Telephone is fully modular. The telephone line cord and the handset cord are both equipped with TELADAPT connectors at each end, which permits quick replacement when required.

Housing

The housing of the M2317 digital telephone consists of a molded plastic base and faceplate. The display module and the main circuit board are fastened to the underside of the faceplate. The Asynchronous Data Option (ADO) circuit board, if equipped, is mounted inside the base.

Keys

The M2317 Telephone is equipped with 32 keys that are arranged as follows:

Fixed keys

These are 16 keys to which a fixed function is assigned. They consist of:

- 12 dial pad keys
- 1 Release key
- 1 Hold key
- 1 Volume control key (with 2 toggle positions)
- 1 Handsfree/Mute key (with associated LCD indicator)

Feature keys

There are 11 programmable line/feature keys on the telephone faceplate. Each has an associated LCD indicator. Lines and features are assigned to these keys by service changes in the system software. A maximum of ten voice Directory Numbers and specific features such as, Auto Answerback, Call Waiting, Dial Intercom, and Display can be assigned.

Softkeys

The M2317 telephone has five LCD-labeled softkeys located immediately beneath the display screen. Each softkey has a seven-character-wide label on the display screen immediately above the key. The labels change as the available features change. For example, a softkey could access one feature in the idle state and a different feature in the active state.

The fifth softkey **"more…"** is used to scroll to a second layer feature menu when there are more softkey-assigned features available for the active telephone state. Pressing the **"more…"** key brings up the labels for the remaining functions. Softkey label positions on the display screen are fixed by the M2317 telephone firmware and cannot be changed by the user.

Alphanumeric display screen

The M2317 telephone is equipped with a two-line (40 characters per line capacity) LCD screen. The 155 x 15 mm (6 x 0.6 in) LCD screen has a capacity of 80 characters (two lines of 40 characters each). The first line displays date and time during the idle state, incoming call identification, feature icons, user prompts, and messages. The second line displays the labels for the softkeys (seven characters per key).

Handsfree key

When Handsfree is on, a user can talk to another party without lifting the handset. Handsfree can be activated by pressing the Handsfree/Mute key, or by pressing a DN key without lifting the handset. The Handsfree/Mute LCD indicator shows the status of the Handsfree. Once Handsfree is activated, it can be deactivated by picking up the handset or by pressing the Release (RLS) key.

Handsfree operates as if an off-hook operation had been performed. For example, when the telephone is idle, pressing the Handsfree/Mute key turns

on the Handsfree and selects a DN (depending on line selection as assigned through COS), enabling the user to make a call. When a call comes into an M2317 and the set is ringing, pressing the Handsfree/Mute key turns on the Handsfree and enables the user to answer the incoming (ringing) call (depending on COS-assigned line selection) without picking up the handset.

The M2317 provides independent volume adjustments for Handsfree, handset, and alerting tone volumes (on-hook dialing and buzz). For detailed information on adjusting the volume, refer to the *M2317 Quick Reference Card*.

LCD indicators

LCD indicators support the following four key/LCD states:

Function	LCD state
idle	off
active	on (steady)
ringing (or “feature pending”)	flash (60 Hz)
hold	fast flash (120 Hz)

The following figures show the M2317 key layout and the different telephone states that can be displayed on the M2317 screen.

Figure 72
M2317 telephone – key identification

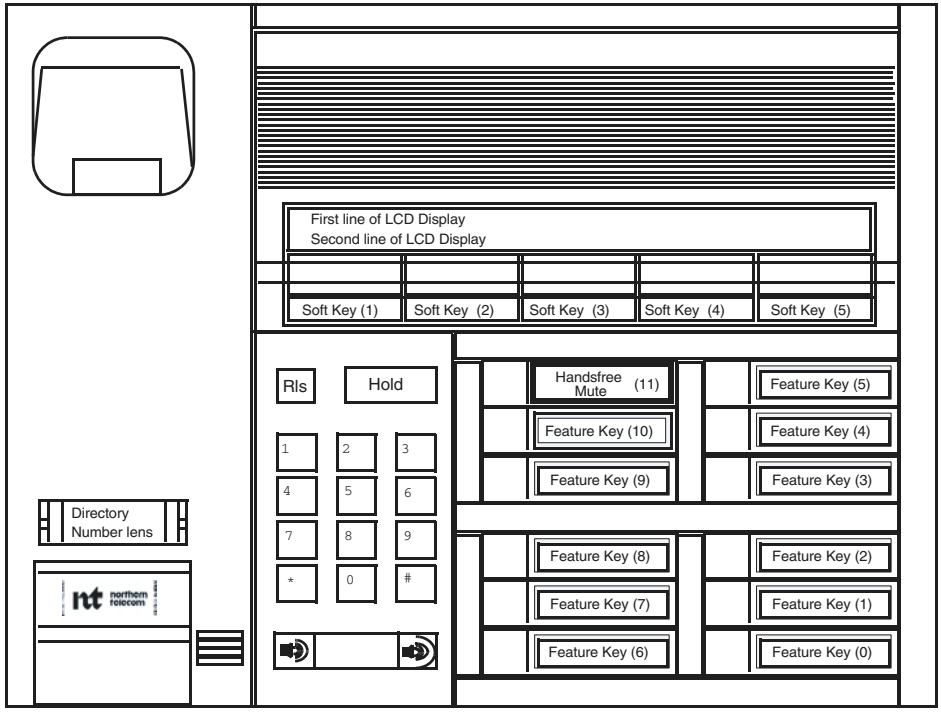

Note: Numbers in brackets in this illustration are shown for testing and identification purposes only. These numbers are not marked on the keys.

Figure 73
M2317 screen display – available idle state features

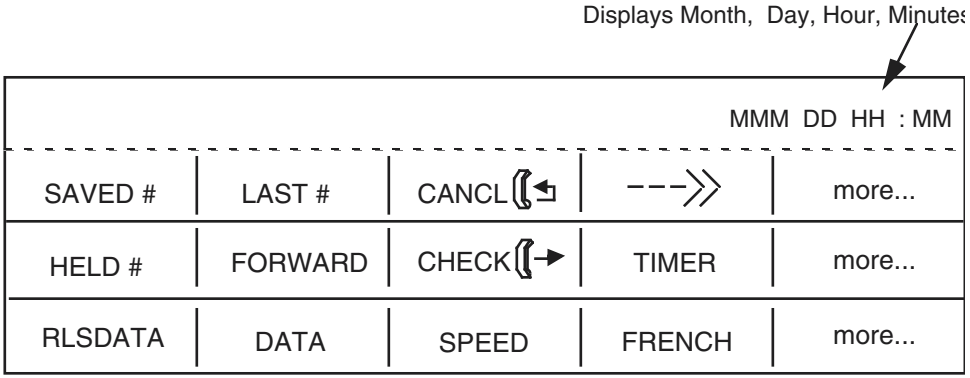

Note 1: Only one row of softkey labels is displayed at a time. Additional rows are accessed by operating the "more..." softkey. The five softkeys are located beneath the screen display in line with each displayed label.

Note 2: The HELD # softkey label is displayed on the screen only when there is a held conference/transfer call.

Note 3: The CANCL softkey label is displayed on the screen only when the "Ring Again" feature has been activated.

Note 4: The FORWARD and CHECK (Check Call Forward) labels are mutually exclusive; the FORWARD key label changes to CHECK when calls are forwarded.

Note 5: The RLSDATA label is displayed only when there is an active data call.

Note 6: The - - ->> key is only offered when CPND is used.

553-AAA0731

Figure 74
M2317 screen display – dialing state

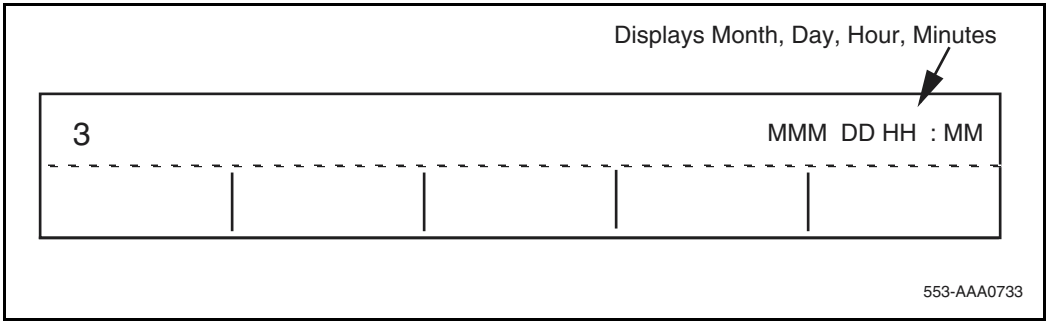

Figure 75
M2317 screen display – ringback state

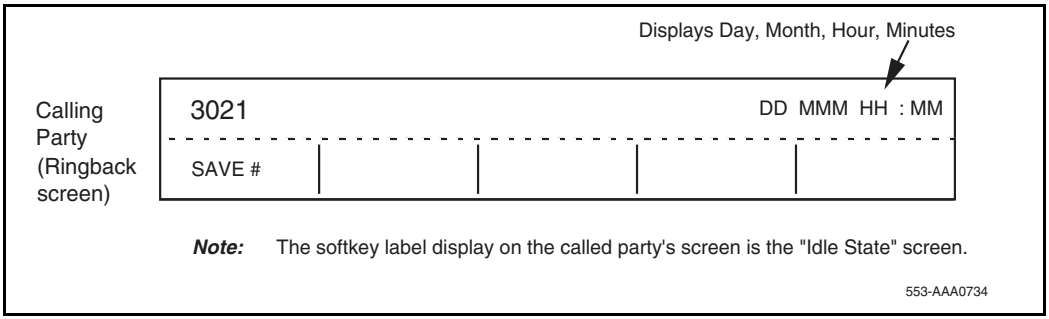

Figure 76
M2317 screen display – available established state features

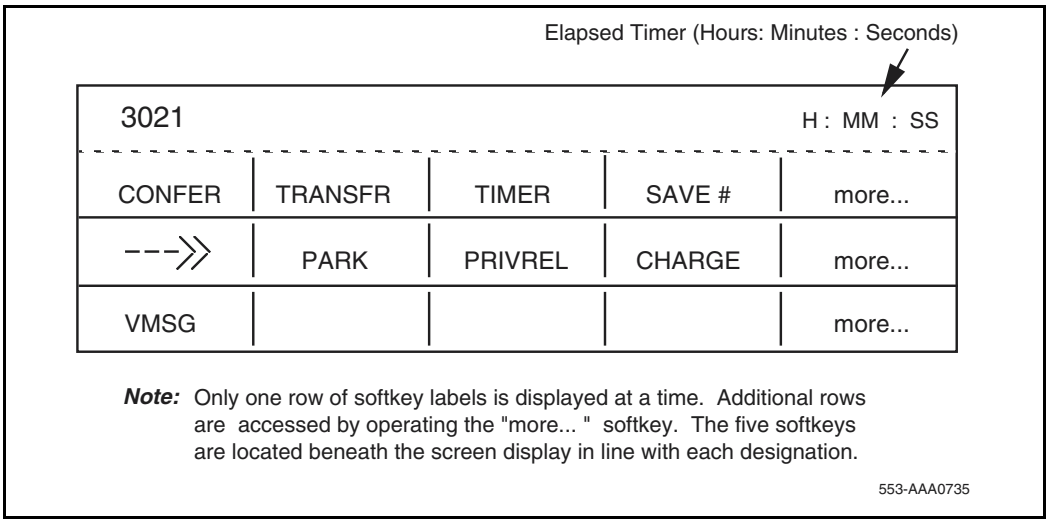

Note: Only one row of softkey labels is displayed at a time. Additional rows are accessed by operating the "more... " softkey. The five softkeys are located beneath the screen display in line with each designation.

Not all the features listed in Table 45 are provided for each customer. Check only those features that are enabled in accordance with the work order.

The **- - ->>** symbol display is associated with the Call Party Name Display (CPND) feature. CPND must be enabled before it can be accessed.

Table 45
M2317 states and associated softkeys (Part 1 of 3)

Screen state	State	Softkey display
Idle	On-hook, voice or data	Saved#, LAST#, CANCL ---->, more..., HELD#, FORWARD, CHECK TIMER, more..., RLSDATA, DATA, SPEED
Dialtone	Ready to transmit dialed digits (voice)	Saved#, LAST#, CALL SPEED#, more..., MESSAGE, PICKUP, ACCOUNT, more...
Intercom dialtone	Ready to transmit dialed digits for an intercom call (voice)	PICKUP
Dialing	Transmitting dialed digits	no softkeys shown
Private Line dialing	Transmitting dialed digits on a private line (voice)	SAVED#, LAST#
Busy	Called party off-hook (voice)	RINGAGN, SAVE#
Reorder	Called party is unavailable (voice)	no softkeys shown
Ringback	Called party is ringing (voice)	SAVE#
ERWT call back	Initial set of ESN routes not available. Set gets Expensive Route Warning Tone (voice).	RINGAGN, SAVE#

Table 45
M2317 states and associated softkeys (Part 2 of 3)

Screen state	State	Softkey display
Established	Voice connection made	CONFER, TRANSFR, TIMER, SAVE#, more…, ——>>, PARK, PRIVREL, CHARGE, more…, MESSAGE, more…
Intercom established	Connection made with an intercom group (voice)	CONFER, TRANSFR, TIMER
Private Line established	Connection made with a private line (voice)	CONFER, TRANSFR, TIMER
Voice Call/Group Call established	Connection made using a voice key or group call key (voice)	no softkeys shown
Conference/Transfer dialtone	Special dialtone (voice)	SAVED#, LAST#, CALL SPEED, ACCOUNT
Conference/Transfer dialing	After special dialtone is heard, dialing the call (voice)	no softkeys shown
Conference/Transfer busy	After special dialtone is received, called party is off-hook (voice)	RINGAGN, SAVE#
Conference/Transfer reorder	After special dialtone is received, called party is unavailable (voice)	no softkeys shown
Transfer ringback	Used xfer feature, and the called party is ringing (voice)	CONNECT, SAVE#
Conference ringback	Used conf feature, and the called party is ringing (voice)	SAVE#
Consultation	The third party (consulting party called by xfer/conf feature) has answered the call (voice)	CONNECT, SWAP
Consultation Hold	The user is talking to the original party and the consulting party is on hold (voice)	CONNECT, SWAP

Table 45
M2317 states and associated softkeys (Part 3 of 3)

Screen state	State	Softkey display
Established Hold	Call held by other party (voice)	no softkeys shown
User status	Leave telset msg for set's status (voice)	no softkeys shown
Display	The user has operated the feature key "DSP" to display the speed/ system speed call numbers (voice or data)	SPEED#, EXIT
Program	The user has operated a feature key that requires user-input such as Auto Dial or Controlled Class of Service (COS)	no softkeys shown
Data call initiation	The user pressed data DN key to make a data call (data)	CALL, SPEED#, SAVED#, LAST#
Data call dialing	Transmitting dialed digits (data)	no softkeys shown
Data call busy	Called party off-hook (data)	RINGAGN, SAVE#
Data call reorder	Called party is unavailable (data)	no softkeys shown
Data call ringback	Called party is ringing (data)	SAVE#
Data call ERWT call back	Initial set of routes not available. Set gets Expensive Route Warning Tone (ERWT).	RINGAGN, SAVE#
Data call established	Connection made (data)	SAVE#

Asynchronous Data Option

See "M2000 data options" on page 193 for more information on ADO requirements.

Firmware features

Firmware is chip-dependent and cannot be changed or altered on site. As a general rule, all firmware is on ROM microchips. Firmware is built into the M2317 telephone and into the Meridian 1 system.

The following functions are performed by firmware in the M2317 digital telephone:

- Predial
- Last Number Redial
- Saved Number
- Redial Saved Number
- Timer
- Time and Date
- Call Processing

Software requirements

All information related to the programmable keys must be downloaded into the M2317 RAM memory through the DLC or ISDLC. Downloading to the telephone is performed when the system is loaded or when a telephone is enabled.

Softkeys are automatically defined for the telephone based on Class of Service (CLS), database, or package restrictions. Softkeys work only in conjunction with the LCD display screen.

Table 46 lists the data features supported by the M2317 firmware.

Table 46
M2317 data features

Data features	M2317	DTE Keyboard
Ring Again	X	X
Speed Call	X	X
System Speed Call	X	X
Display		X
Call Forward	X	
Call Transfer (Note 1)		X
Autodial	X	X
Last Number Redial	X	
Save Number	X	
Redial Saved Number	X	

Note 1: Manual modem pooling using keyboard dialing requires only call transfer to be defined.

Note 2: The Data DN must always be assigned to feature key 10.

Specifications

The following specifications govern the safety and performance of the Meridian M2317 Telephone, and outline the environmental conditions under which this performance is achieved.

Safety considerations

Shock and fire hazards

For protection against electrical shock, energy hazards, or fire hazards, the telephone meets the following specifications:

CSA, C22.2 No. 0.7 – M1985

UL 1459, relevant sections

Overvoltage protection

The M2317 telephone meets the specifications detailed by CSA, C22.2 No.7, paragraph 6.9.3.

Environmental considerations

Temperature and humidity

Operating state:

Temperature range	0° to 50° C (32° to 122°F)
	0° to 40° C (32° to 104°F) with Data Option
Relative humidity	5% to 95% from 4° to 29°C (39° to 84° F) noncondensing
	5% to 34% from 29.5° to 49°C (85° to 120°F) noncondensing

Storage:

Temperature range	–20° to 70° C (–4° to 158° F)
Relative humidity	5% to 95% from –20° to 29°C (–4° to 84°F) noncondensing 5% to 15% from 29.5°C to 66°C (85° to 150°F)

Dimensions and weight

The M2317 digital telephone has the following dimensions:

depth	226.5 mm (9 in)
width	272.0 mm (10.1 in)
height (front)	27.5 mm (1.1 in)
height (rear)	73.5 mm (2.9 in)

Excluding the power supply and the NT1F09AC Asynchronous Data Option board, the M2317 weighs approximately 1.4 Kg (3 lb). With the Data Option installed, the telephone, excluding power supply and data cable, weighs approximately 1.56 Kg (3.5 lb).

Line engineering

The M2317 digital telephones operate to their full potential through twisted pair wiring on transmission lines selected by the rules given in "Digital telephones line engineering" on page 493 *&c*. The maximum permissible loop length is 1067 m (3500 ft.) of 22 or 24 AWG or 760 m (2500 ft.) of 26 AWG standard twisted wire with no bridge taps or load coils.

The 1067 m (3500 ft.) loop length requires the use of a Digital Line Card (DLC) or an Integrated Services Digital Line Card (ISDLC) NT8D02, or later.

Power requirements

The M2317 digital telephone uses loop power for all circuits requiring +10 V. To satisfy the power requirements for those circuits on a maximum loop, as defined in "Digital telephones line engineering" on page 493, 60mA of 13.5 V dc must be available at the telephone. The line card must have compatible voltage and source resistance to meet these requirements.

Logic and other circuitry requiring +5 V is powered from an external, regulated +5 V dc supply when the data option is not installed. The external power supply must meet the following specifications:

Input:	95–129 V ac, 60 Hz
Output:	+5 V dc, + or –5%, 300 mA
	10 mV maximum RMS ripple
Cord:	2.5 m (8 ft.) of 20 AWG wire mating to a Switchcraft 722A connector
Case:	Wall mounted, CSA and UL approved.
	Operational within 0°C (32°F) and 50°C (122°F) temperature limits
Impedance:	Greater than 10 M¾ to ground

The external power supply, in all cases where no Asynchronous Data Option is installed, is connected to the mating connector mounted in the rear of the M2317 telephone. It covers the area where the RS-232-C interface connector would be located.

> ***Note:*** If the Asynchronous Data Option is installed, an external, multi-output data power supply is required. Refer to NPS50220-03L5. See “M2000 data options” on page 193 for more information on ADO requirements.

The data option power supply connector plugs into the back of the telephone next to the RS-232-C interface connector. Data option installation requires the removal of the telephone power supply connector.

The NPS50220-03L5 power supply meets the following specifications:

- AC input voltage: 105 - 132 V AC
- Input line frequency: 57 - 63 Hz
- Operating temperature: 0° to 50°C (32° to 122°F)
- Operating humidity: 5% to 95% non-condensing
- Storage temperature: -40° to 70°C(-40° to 158°F)

Figure 77
M2317 telephone cross-connections

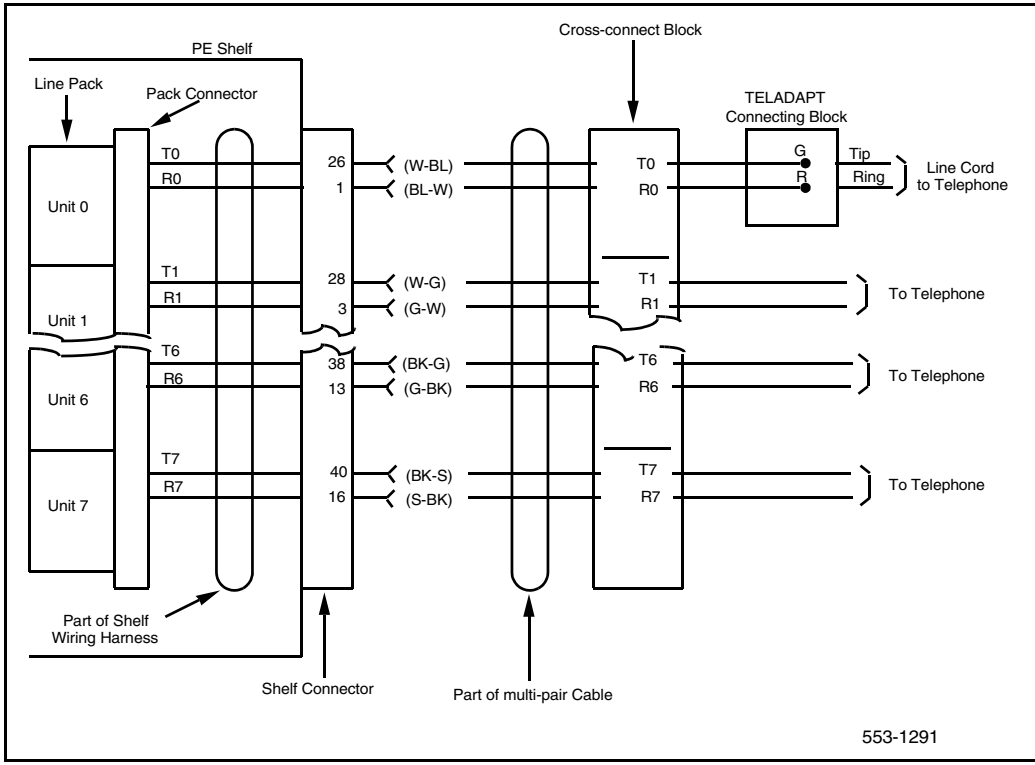

- Output voltages:
  +5 V DC at 1.0 A
  -12 V DC at 200 mA
  +12 V DC at 200 mA
- Case dimensions: 178 x 102 x 76 mm (7 x 4 x 3 in.)

The NPS50220-03L5 is equipped with an internal thermal and short circuit protection.

Whenever the external power supply fails (due to failure of the power utility), the M2317 Telephone assumes Plain Ordinary Telephone Service (POTS) status. At this time the telephone is capable of receiving and originating calls

on the prime DN, and of giving the usual alerting tones (ringing). It will not support the Display screen, softkeys, feature keys, Handsfree, or data facilities while in POTS status.

Figure 78
Block diagram of M2317

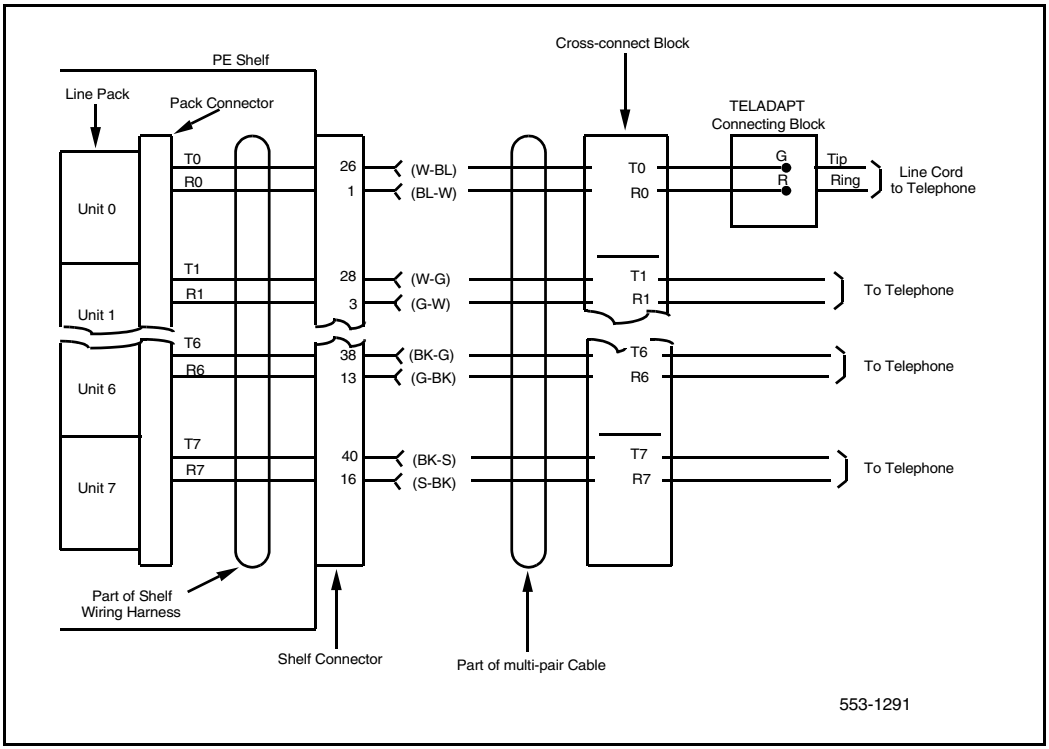

Data communication

The M2317 can be equipped with an Asynchronous Data Option which will permit the use of either the telephone's dial pad or the feature keys to place and terminate data calls in the asynchronous mode. The Data Option also supports keyboard dialing from the data terminal when that terminal operates in the asynchronous mode.

The Asynchronous Data Option is equipped with a dialing feature which enables the user to originate data calls to local and remote Data Terminal Equipment (DTE) directly from a data terminal keyboard or personal computer. The dialing feature, in conjunction with the communications firmware provided with the Data Option, supports most of the HAYES Smartmodem dialing features. Terminal emulation packages can also be used with the dialing feature.

Data characteristics

The M2317 Asynchronous Data Option communicates with Data Terminal Equipment (DTE) having characteristics as shown below.

Data type	ASCII
Synchronization	Asynchronous, Start-Stop
Number of Bits	8 bits
Parity	none (unchecked)
Data rate	300, 1200, 2400, 4800, 9600, 19200 bits per second (autobaud)
Stop bits	2 bits for 110 bits per second; 1 bit for all other speeds
Transmission	Full duplex

Ordering information

Refer to the Nortel Networks price book or contact your Nortel Networks representative for specific ordering codes.

If the M2317 telephone fails to function properly, or if mechanical breakage occurs, do not attempt to make repairs in the field. Return the unit to the manufacturer.

Note: The NT1F09AA Synchronous Data Option must be release 4 or later and requires the use of the multi-output Data Power Supply (A0336823).

M2616CT cordless telephone

Contents

This section contains information on the following topics:

Functional description

This section supports the M2616CT cordless telephone. The M2616CT provides the user with mobility within the office environment. The M2616CT is an unlicensed 900 MHz single cell narrowband digital telephone. It supports 20 users within a maximum area of 50,000 square feet. The maximum range of the M2616CT from base to the register handset is 150 feet (45 m), depending on the phone's location. The following information is an overview of the base and handset units.

Physical description

Keys

The M2616CT Cordless telephone is equipped with 17 feature keys that are arranged as follows.

Fixed keys

The fully integrated M2616CT base unit provides 13 programmable line/ feature keys, plus a dedicated handset Locator, Volume control, Hold, Release, and Handsfree Mute and Program key. The handset has six programmable keys that corresponds to the six keys on the base unit (three bottom keys on each side of the LED indicator).

There are six keys to which a fixed function is assigned. They consist of the following:

- 1 Release key
- 1 Hold key
- 1 Volume control key (with 2 toggle positions)
- 1 Program Key
- 1 Handsfree/Mute key (with associated LCD indicator)
- 1 Locator key

Volume control key

Volume is controlled by one key with two toggle positions. Press the “Volume Up” or “Volume Down” pad of the key to increase or decrease the volume for the tone or sound that is currently active.

To change the volume of the ringing sound, the user must press “Volume Up” or “Volume Down” while the ringing is heard. The volume settings are saved for subsequent calls until new volume adjustments are made.

Handsfree key

When Handsfree is on, a user can talk to another party without lifting the handset. Activate Handsfree by pressing the Handsfree/Mute key, or by pressing a DN key without lifting the handset. The Handsfree/Mute LCD indicator shows the status of the Handsfree. Once Handsfree is activated, it can be deactivated by picking up the handset or by pressing the Release (RLS) key.

The M2616CT provides independent volume adjustments for Handsfree, handset, and alerting tone volumes (on-hook dialing and buzz). For detailed

adjusting information, refer to the *M2616CT Cordless Telephone User Guide*.

LCD indicators

LCD indicators support the following four key/LCD states:

Function	LCD state
idle	off
active	on (steady)
ringing	flash (60 Hz)
hold	fast flash (120 Hz)

Housing

The housing of the M2616CT Cordless Telephone consists of a molded plastic base and faceplate. There is a display on both the base unit and the handset unit.

General features

Figure 79 and Figure 80 show the location of each control on the M2616CT and briefly describe the controls.

Figure 79
M2616CT Base Unit

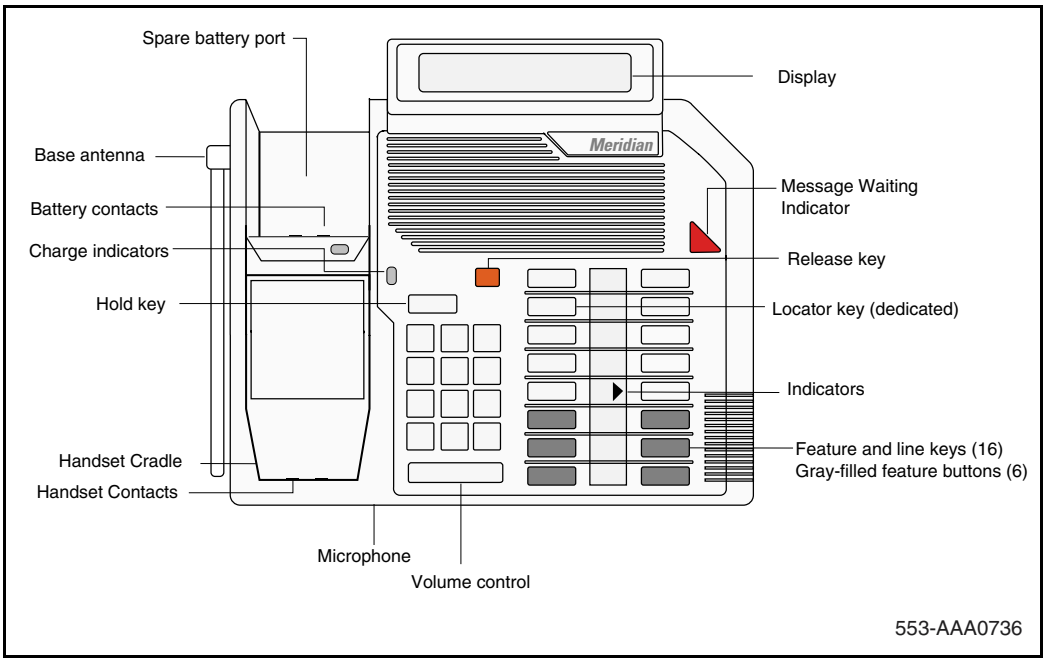

Base Unit Controls

The **Base Display** is a two-line, 24-character display.

- The **Feature and line keys** access telephone features and lines. Six feature keys map to the handset feature keys. They are the three bottom keys, on either side of the light indicator LED strip.
- The **Handset cradle contacts** charge the cordless handset. The charge indicator light indicates the battery status of the handset. Green indicates the battery is fully charged.
- The **Charge indicator** lights indicate the status of the handset battery. Red indicates the handset is charging. Green indicates the battery is fully charged. The battery contacts, located on the upper half of the handset cradle, charge the optional spare battery.

- The **Diamond-shaped indicator light** appears beside active lines and features.
- The **Locator key**, locates the handset/manual Radio Frequency mode (if feature is assigned).
- The **Volume bar** controls the volume of the handset, speaker, and ringer.
- The **Microphone** enables handsfree calling. When Handsfree is on, a user can talk to another party without lifting the handset. Handsfree can be activated by pressing the Handsfree/Mute key, or by pressing a DN key without lifting the handset. The Handsfree/Mute LCD indicator shows the status of Handsfree. Once Handsfree is activated, it can be deactivated by picking up the handset or by pressing the Release (RLS) key.
- The **Release key** terminates an active call.
- The **Message Waiting indicator light** indicates that a voice mail message has been left.

Figure 80
M2616CT Handset

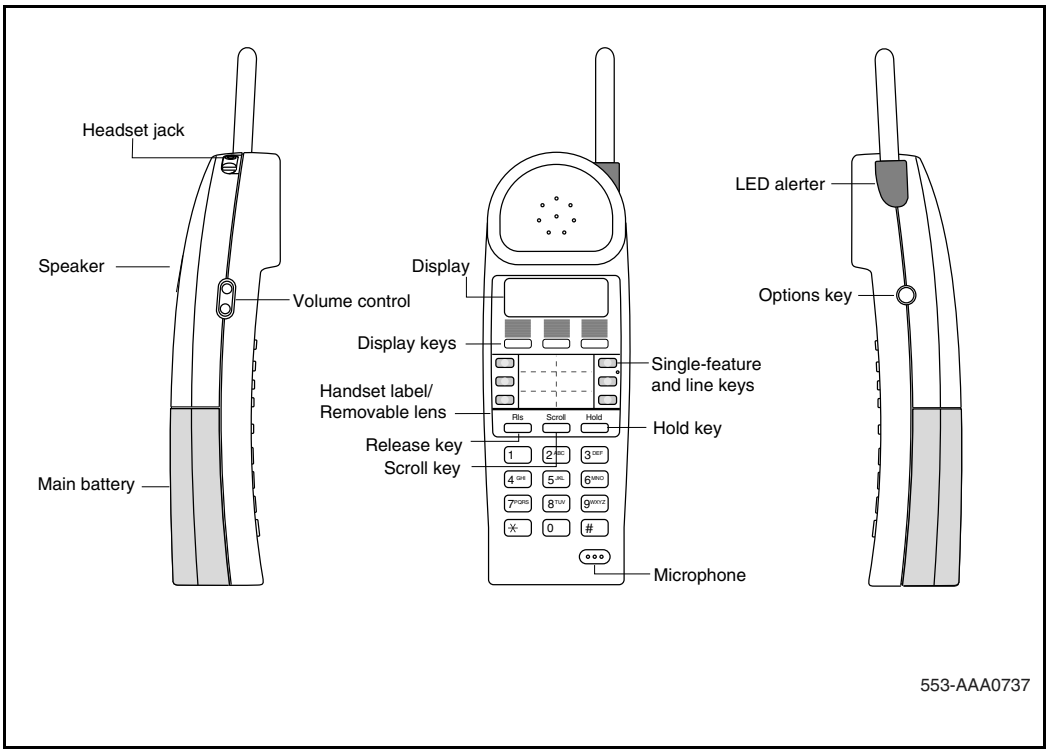

Handset Controls

The handset Display is a two-line, 16-character display with a scroll button located between the Hold and the Release keys. The scroll key provides the extra 8 characters that map to the two-line, 24-character display on the base unit. An arrow on the display indicates when to use the scroll key to display additional text not shown on the display window.

The M2616CT displays an icon that indicates when the handset is out of range or when the battery is low. The display screen shows the time, date, call information and provides guides to various M2616CT features.

The **Display keys** show the prompts and Option list settings depending on the state of the handset. The prompts are displayed above each key. The lower line of the display screen is used to display instructions.

The **Message Waiting/Ringing Indication** is a red LED located on the base of the handset antenna that provides message-waiting indication and flashing visual ringing indication.

The **Handset labels** enable the feature keys to be personalized.

The **Headset jack** connects the detachable headset unit. Check with your Nortel Networks representative for authorized headset vendors.

The **Hold key** places an active call on hold.

The **Options key** enables changes to be made to the M2616CT settings in the Options list. The Options key is located on the right side of the M2616CT handset. Used with three display function keys, it lets users customize handset options, including the following:

- Speaker on/off – A speaker enables users to listen to voice mail or listen to a conference call without using the handset.
- Mute – Microphone mute selection.
- Ring Selection – Enables users to select or change the ringing cycle,

  or

- Vibrate mode – Vibrating notification instead of usual ringing cycle. A special vibrating battery must be purchased and installed in order to use this feature. Contact your local Nortel Networks distributor for the part number.
- Backlight (on/off) – Lights the display when the handset is in use.
- Base Lock/Unlock – Enables the user to lock the M2616CT base unit to prevent others from accessing the base while the handset is in use.
- Ring Volume – Adjusts the handset ringer volume.

- Current Audio – Resets the handset volume to the default setting.
- Move Call Option – Enables the user to conveniently move from a handsfree call on the base unit to the handset or move a call from the handset to handsfree on the base unit.

The **Release key** terminates an active call.

The **removable lens** protects the handset label.

The **Single-feature and line keys** enables one-touch dialing, feature operation, or line access. These six keys corresponds to six of the single-feature keys on the base. The single-feature keys glow red to indicate when lines or features are active.

The **Scroll key** displays additional information in the display window.

The **Volume control** adjusts the volume for ring and alerter tones.

The **LED alerter** provides a visual ringing indicator and message-waiting indicator.

The **Speaker** enables a user to listen to voicemail or a conference call without holding the handset.

The Handset automatically goes into **Sleep Mode** when the handset is idle for more than 45 seconds. The handset can be “awakened” by pressing either a DN key, or the display key associated with the “Wake” function on the display.

Firmware features

The M2616CT utilizes the NT8D02 Digital Line Card or the NTMW05AA Mini IPE 24 Port Digital Line Card.

System Software

The M2616CT is compatible with the following systems:

- Meridian 1 Option 11C Chassis

- Meridian 1 Small System
- Meridian 1 Large System
- Succession 1000M Small System
- Succession 1000M Large System

Modular Options

The following modular options are not supported on the M2616CT due to required placement of the RF circuitry within the telephone:

- Meridian Communications Adapter (MCA)
- Analog Terminal Adapter (ATA)
- Key Expansion Module(s)
- External Alerter Interface

Call Center

The Meridian M2616CT does not support ACD features, and should not be programmed as a Call Center agent or supervisor.

System administration

To configure the M2616CT (Cordless telephone) on the Succession 1000M, Succession 1000, and Meridian 1 systems, refer to LD 11 in *Software Input/ Output: Administration* (553-3001-311).

For the Locator key (key 14) to function, do not assign a feature to this key. Handsfree is required for the M2616CT to function properly.

M2616CT (Cordless Telephone) Battery

The M2616CT handset uses rechargeable 700 mAh and 1000 mAh Nickel-Cadmium batteries. Use only the battery identified or provided with this product. It should be charged according to the instructions and limitations specified in the *M2616CT Cordless Telephone User Guide*.

Handset Registration to Base Unit

Each M2616CT handset automatically registers with its respective base unit. In cases where a substitute handset is required for troubleshooting purposes, a different M2616CT handset can be re-registered by placing the different handset on-hook, and unplugging, then re-plugging in the base unit's ac power adapter and telephone line cord.

Wall mounting the M2616CT

The M2616Ct base is equipped with a reversible footstand that enables the telephone to be mounted on the wall. For instructions, refer to the *M2616CT Cordless Telephone User Guide*.

Specifications

This section lists the specifications required for the M2616CT (Cordless Telephone).

Safety considerations

The following safety procedures should be followed.

Shock hazards

The telephone is not intended for direct connection to the public switched network or other exposed plant networks, because the exposed pins on the handset cradle (where the handset sits) creates a possible outlet for harmful voltage. The M2616CT is designed to be used with a Succession 1000M, a Succession 1000M, or a Meridian 1 PBX. Before installing the M2616CT, refer to *M2616CT Cordless Telephone User Guide.*

Use proper installation and charging procedures for the M2616CT battery pack to reduce risk of fire or personal injury.

Discard the battery if the battery is cracked or damaged. A damaged battery can leak electrolytes that are toxic if swallowed, are corrosive, and can cause damage to the eyes and skin.

Do not short circuit the battery. Use care in handling batteries in order to not short the battery with conducting materials such as rings, bracelets, and keys. The battery or conductor can overheat and cause burns.

Power requirements

Both the M2616CT telephone and the M2018 telephone are loop powered. Loop power uses +15 V and –15 V sources and assumes 3500 feet maximum loop length of 24 AWG (0.5 mm) wire and a minimum of 13.5 V at the telephone terminals. The RF deck that powers the handset requires a wall transformer (Class 2 power supply Output rated at 7.5v dc).

The M2616CT handset uses rechargeable Nickel-Cadmium batteries. Both a 700 mAh and 1000 mAh battery, with or without a vibrate alerter, are available.

Battery charge time for the 700 mAh battery takes approximately 2.25 hours when attached to the handset, and provides approximately four hours continuous talk time if the handset backlight is turned on. If the handset backlight is turned off, up to five hours of continuous talk time is provided, depending on usage. Up to 72 hours of standby battery time is provided when the handset is off the base unit.

The 1000 mAh battery takes up to 2.5 hours to charge when attached to the handset and provides approximately 5.5 hours continuous talk time, if the handset backlight is turned on. If the handset backlight is turned off, up to seven hours of continuous talk time is provided, depending on usage. Up to 86 hours of standby battery time is provided when the handset is off the base unit.

The batteries charge in both the handset and the base unit. The spare battery-charging port on the base unit provides a “trickle charge” that charges a battery at a slower rate than through the handset.

If the power supply fails, the optional spare battery in the spare battery charger powers the handset. Available talk-time depends on how much charge remains in the battery. The base phone continues to function without the handset in handsfree mode, even if the power supply fails and the spare battery is discharged or not available.

Environmental considerations

The following environmental procedures should be followed.

Environmental Performance

Depending on the environmental conditions, the range of the M2616CT can be reduced. Steel girders and concrete walls can limit the range of the cordless telephone. Line of sight conditions provide a maximum range of 150 feet. Some microwave towers and other products that send out 900MHz frequencies can cause clipping when the handset is in use. The manual Radio Frequency (RF) channel selection, described on page 306, prevents interference with other 900 MHz devices.

The M2616CT uses 900 MHz narrowband technology to deliver digital RF signals from the M2616CT base to the handset. Twenty 900 MHz narrow band channels have been allocated to the handset. When the handset is lifted from the base, the RF deck in the base scans the 20 channels for a clear channel to use. RF channels can also be manually selected using key 14 on the base.

Table 47
M2616CT Frequency Ranges

Channel/ Frequency		Channel/ Frequency		Channel/ Frequency	
CH00	902.6	CH06	912.0	CH13	919.6
CH01	904.0	CH07	914.2	CH14	921.4
CH02	905.6	CH08	914.8	CH15	921.4
CH03	907.2	CH09	915.2	CH16	923.0
CH04	908.8	CH10	915.8	CH17	924.8
CH05	910.6	CH11	916.4	CH18	926.4
CH06	912.0	CH12	918.4	CH19	927.6
CH07	914.2				

Range

Up to 20 M2616CT sets can be installed within a coverage area of approximately 50,000 square feet. The typical range of the M2616CT base unit to the cordless handset is between 125 feet to 150 feet. In open environments, additional coverage can be achieved.

If a user steps out of range during an active call, the M2616CT simply places the call on Hold, giving the user an opportunity to step back into range and conveniently resume the call by pressing the DN (Directory Number) key. Out-of-range indication on the handset display is also provided, if the user is on an active call, or the handset is idle.

Outside Plant

M2616CT is not intended for direct connection to the public switched network or other outside plant networks. The interface in the M2616CT is not suitable for direct connection to lines that exit the building, or connections to non-approved telecommunications products. Exposed contacts at the base of the M2616CT are directly connected to the line cord. Without proper protection, any foreign voltage from the line cord can be exposed to these contacts, and can cause personal injury.

Medical Facilities

The M2616CT is a 900MHz radio frequency telephone that can cause problems in medical facilities. Please advise when using this telephone and ensure that all safety precautions are followed.

Temperature and humidity

Operating state:

Temperature range	0° to 50° C (32° to 122°F)
	0° to 40° C (32° to 104°F) with Data Option
Relative humidity	5% to 95% from 4° to 29°C (39° to 84° F) noncondensing
	5% to 34% from 29.5° to 49°C (85° to 120°F) noncondensing

Storage:

Temperature range	–20° to 70° C (–4° to 158° F)
Relative humidity	5% to 95% from –20° to 29°C (–4° to 84°F) noncondensing 5% to 15% from 29.5°C to 66°C (85° to 150°F)

Battery Disposal

Rechargeable Nickel-Cadmium batteries are recyclable. Recycle or dispose of them properly.

- Discard the battery according to local ordinances.
- Do not discard the battery in office or household waste.
- Do not incinerate the battery as it can explode.

Line engineering

M2616CT telephones operate through twisted pair wiring on transmission lines selected by the rules given in “Digital telephones line engineering” on page 493. The maximum permissible loop length is 3500 ft. of 24 AWG (0.5 mm) standard twisted wire with no bridge taps.

Ordering information

Refer to the Nortel Networks price book or contact your Nortel Networks representative for specific ordering codes for the M2616CT (Cordless Telephone).

If the M2616CT fails to function properly, or if mechanical breakage occurs, do not attempt to make repairs in the field. Return the unit to the manufacturer.

Meridian European digital telephones: M3110, M3310, and M3820

Contents

This section contains information on the following topics:

Feature description

The Meridian European Digital telephones series of telephones, which is only available in Europe, consists of the following telephones:

- M3110
- M3310
- M3820

Meridian digital telephones are designed to provide cost-effective integrated voice and data communication. These telephones communicate with the Succession 1000M, Succession 1000, and Meridian 1 systems by using digital transmission over standard twisted-pair wiring. They interface with the system using the Integrated Services Digital Line Card (ISDLC) or the eXtended Digital Line Card (XDLC).

Meridian digital telephones are connected to the system through a two-wire loop carrying two independent 64 kbs PCM channels with associated signaling channels. One of the two PCM channels is dedicated to voice while the other is dedicated to data traffic.

The telephone interfaces with the Digital Line Card (XDLC) or ISDLC in the Peripheral Equipment shelf of the system. The XDLC supports 16 voice and 16 data ports. The ISDLC supports eight voice and eight data ports. A TN is assigned to each port in the system software.

Figure 81
M3110 Meridian digital telephone

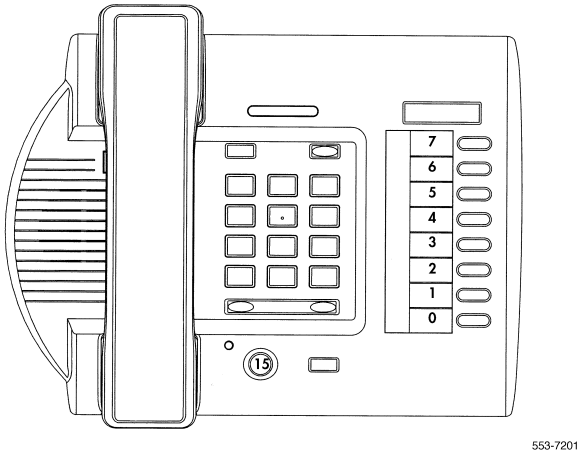

M3110

The M3110 Meridian digital telephone supports the following features:

- On-Hook Dialling and Group Listening
- Dedicated release and hold keys

Figure 82
M3310 Meridian digital telephone

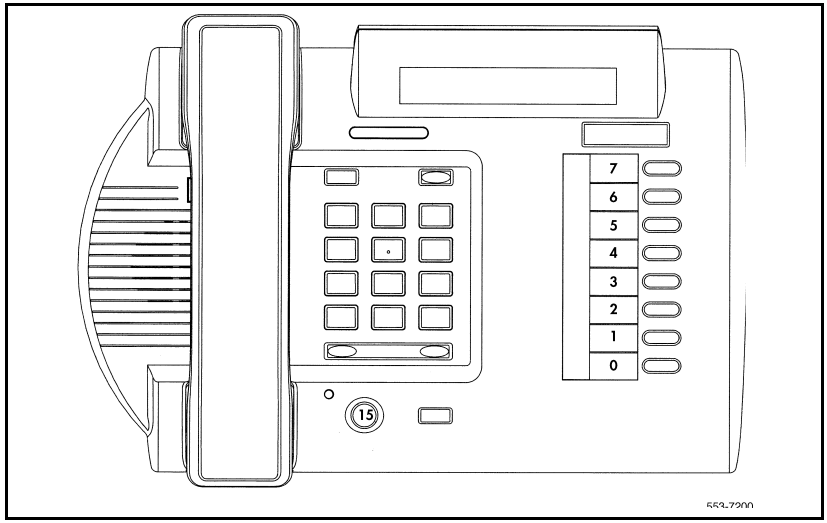

Figure 83
M3820 Meridian digital telephone

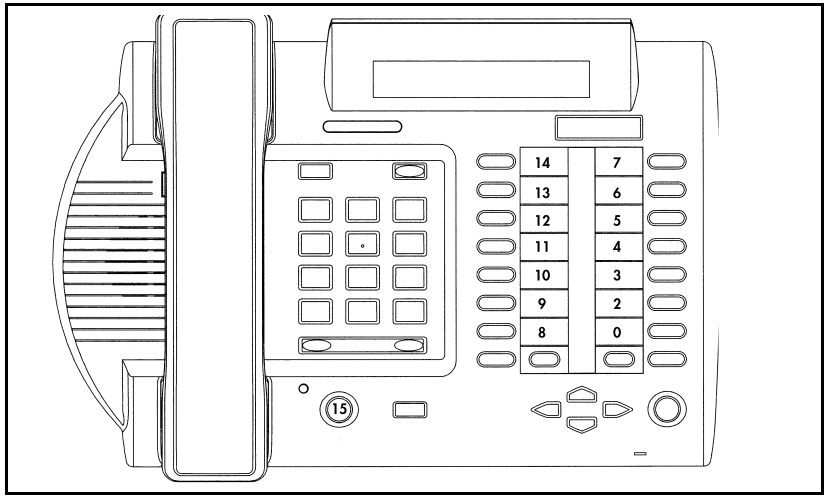

- Message Waiting and Mute Indicators

- 10 Feature System Programmable keys including:
  - 8 system programmable keys
  - Mute key
  - Speaker key
- Volume control for:
  - Handset
  - Ringing Tone
  - Buzz Tone
  - On-Hook dialling and Group Listening
- Support for the following terminal options:
  - MCA data option to provide integrated voice and data
  - External Alerter for high ambient noise environments
- Wall mount ability
- Brand line insert to provide for special company logos

M3310

The M3310 Meridian digital telephone supports the following features:

- Handsfree, On-Hook Dialling and Group Listening
- Dedicated Release and Hold keys
- Message Waiting and Speaker/Mute Indicators
- Headset Socket
- 2 x 24 character display
- 10 Feature keys including:
  - Program key
  - 7 system programmable keys
  - Speaker key

  - Mute key
  - Volume control for:
  - Handset/Headset
  - Ringing Tone
  - Buzz Tone
  - On-Hook dialling and Group Listening
  - Handsfree

- Support for the following set options:
  - MCA data option to provide integrated voice and data
  - External Alerter for high ambient noise environments
  - Wall mount ability

- Brand line insert to provide for special company logos

M3820

The M3820 Meridian digital telephone supports the following features:

- Handsfree, On-Hook Dialling and Group Listening
- Dedicated Release and Hold keys
- Message Waiting and Speaker/Mute Indicators
- Headset Socket
- 2 x 24 character display
- 20 Feature keys including:
  - Store/program key
  - 13 system programmable keys
  - Handsfree/speaker key
  - Mute key
  - Directory key

  - Caller's List key
  - Edit key
  - Delete key

- Volume control for:
  - Handset/Headset
  - Ringing Tone
  - Buzz Tone
  - On-Hook dialling and Group Listening
  - Handsfree

- Directory/Caller's List with 9 dedicated keys namely:
  - Directory, Callers, Edit, Delete, 4 cursor and Dial

- Support for the following terminal options:
  - MCA data option to provide integrated voice and data
  - External Alerter for high ambient noise environments
  - Wall mount ability
  - Add-on Key Expansion Modules (2 maximum)

- Brand line insert to provide for special company logos

Meridian digital telephones used with a headset

You can use an electret headset in the headset port of the digital telephones (M3310 and M3820 only). Alternatively, choose an amplified headset that draws power from a battery or AC transformer; power is not provided by the telephone. The amplifier must draw less than 400 micro amps from the telephone jack.

The headset should be designed to work with a telephone jack with these characteristics:

Transmit interface: +5 V through 10K DC bias resistance with maximum current of 500 micro amps. The differential input impedance is 10K ohms. Connects to pins 2 and 5 of the headset jack.

Receive interface: single ended output with output impedance of 180 ohms. Connects to pins 3 and 4 of the headset jack.

Physical description

Meridian digital telephones support many general features as illustrated in Table 48.

Table 48
Meridian digital telephone general features (Part 1 of 2)

Feature	M3820	M3310	M3110
Handsfree, On-Hook Dialling, and Group Listening	yes	yes	yes
Dedicated Release and Hold keys	yes	yes	yes
Message Waiting and Speaker/Mute Indicators	yes	yes	yes
Headset Socket	yes	yes	no
2 x 24 character display	yes	yes	no
Feature keys including:	20	10	10
• Store/program key	yes	yes	no
• system programmable keys	13	7	8

Table 48
Meridian digital telephone general features (Part 2 of 2)

Feature	M3820	M3310	M3110
• Handsfree/speaker key	yes	yes	yes
• Mute key	yes	yes	yes
• Directory key	yes	no	no
• Caller's List key	yes	no	no
• Edit key	yes	no	no
• Delete key	yes	no	no
Volume control for:			
• Handset/Headset, Ringing Tone, Buzz Tone, On-Hook dialling and Group Listening	yes	yes	yes
• Handsfree	yes	yes	no
Directory/Caller's List with dedicated keys for Directory, Callers, Edit, Delete, 4 cursor and Dial	yes	no	no
Terminal options:			
• MCA data option to provide integrated voice and data, External Alerter for high ambient noise environments, Wall mount ability	yes	yes	yes
• Add-on Key Expansion Modules (2 maximum)	yes	no	no
Brand line insert to provide for special company logos	yes	yes	yes
Note: The location of the buttons used to activate and interact with these features is shown in Figure 84 on page 320.			

Fixed keys (same for all three models)

Hold

By pressing the hold key, you can put an active call on hold. Return to the caller by pressing the extension key beside the flashing LCD indicator.

Release (Rls)

You can terminate an active call by pressing the Rls key or by hanging up the handset. The release key is especially useful for disconnecting handsfree and headset calls.

Volume control

The volume key controls the volume of the handset, the speaker and the ringer. Raise the volume by pressing the right side of the bar. Lower it by pressing the left side.

Mute

When engaged in a call, you can press the mute key. The party(ies) to whom you are speaking cannot hear you. This is especially useful when on a conference call and you are only listening. When you wish to return to the two-way conversation, you must push the mute key again. The mute key applies to handsfree, handset and headset microphones.

Speaker/Handsfree

The speaker key allows you to activate handsfree and group listening features. Handsfree is only available on the M3310 and M3820 models and is enabled by the system administrator. If handsfree is not configured at the switch, the telephone can only be used to listen.

Figure 84
The location and function of buttons on the Meridian digital telephone

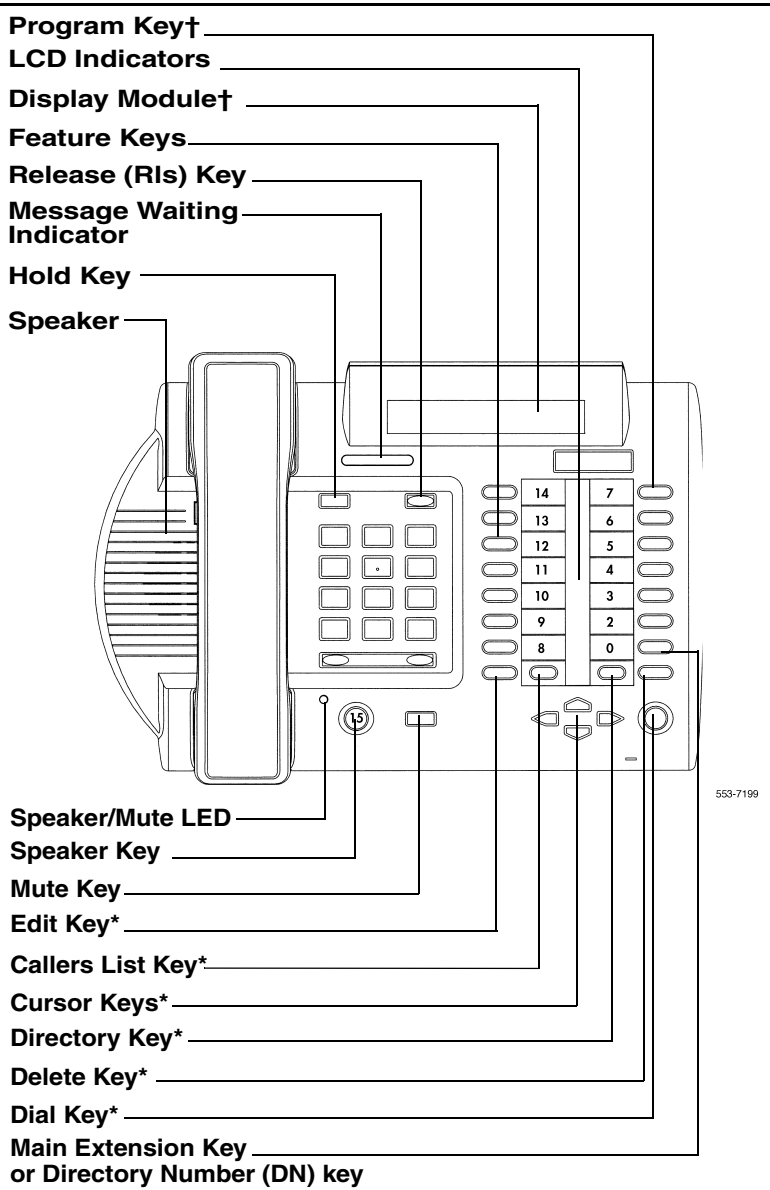

† M3310 and M3820 only
* M3820 only

The table below indicates the mode the terminal is in when the speaker key is operated under the various switch and set operations.

Table 49
Speaker Key Function

MODEL	Handsfree not selected at the switch	Handsfree selected at the switch - Group listening off	Handsfree selected at the switch - Group listening On
M3820	CPM and primary DN key-Speaker LED is not illuminated	HF and Primary DN key - speaker LED is on when in Handsfree mode	HF, Group listening and Primary DN key - speaker LED is on when in HF or Group Listening mode
M3310	CPM and Primary DN key-Speaker LED is not illuminated	HF and Primary DN key - Speaker LED is on when in HF mode	HF, Group Listening and Primary DN key - Speaker LED is on when in HF or group listening
M3110	CPM and Primary DN key- Speaker LED is not illuminated	N/A	Group listening and Primary DN key - speaker LED is on when in Group listening mode.

Note 3: CPM is Call Process Monitor which enables the user to hear, for example, the dial tone in the speaker. Group listening enables the user to speak through the handset/headset microphone and one or more parties can listen through the speaker, thus hearing both sides of the conversation. In Handsfree mode, the user (or group of users) uses both the handsfree microphone and speaker.

Note 4: Group listening is switched on or off under the program key option *1. (M3820 and M3310 only)

Additional feature keys

Message Waiting lamp key

Each telephone has a red message waiting LED just above the hold and Rls keys that lights to indicate a message is waiting. This LED is the primary message waiting indicator and lets you know that a message is waiting, regardless of whether the telephone has a message waiting key/lamp pair. You must have Message Waiting allowed Class of Service. See LD 11, *Software Input/Output: Administration* (553-3001-311) and *Software Input/Output: Maintenance* (553-3001-511).

If you do assign a message waiting key/lamp pair, there will be two indications of a message waiting:

— the red Message Waiting LED lights

— the LCD associated with the Message Waiting key blinks

Autodial key

You can assign an Autodial Key that dials the message center (or voice mail system) to avoid the double indication or have no key/lamp pair assigned to the message center.

Programmable Feature keys

Each Meridian digital telephone has a number of programmable keys with LCD indicators that can be assigned to any combination of directory numbers and features. The M3820 has 13 fully programmable feature keys; the M3310 has seven, and the M3110 has eight. The lower right-hand key (key 0) is reserved for the Primary DN.

LCD indicators support four key/LCD states:

Function	LCD state
idle	off
active	on (steady)
ringing	flash (60 Hz)
hold	fast flash (120 Hz)

Note: An indicator fast flashes when you have pressed a feature key but have not completed the procedure necessary to activate the feature.

Software requirements

Meridian digital telephones are supported by software. The package number for the Meridian digital telephones is (170.) The mnemonic is ARIE. The DSET package (88) and the TSET package (89) are required.

Terminal options

This section describes the options available for Meridian european digital telephones. Table 50 lists the features and optional hardware available for each telephone.

Table 50
Hardware features and options

	M3820	M3310	M3110
Programmable Feature keys	13	7	8
Handsfree microphone	x	x	
Optional hardware available:			
Key Expansion Module	x		
Note: In this table, x indicates available features for the telephone type listed in the top row.			

Table 50
Hardware features and options

	M3820	M3310	M3110
Meridian Communications Adapter (MCA)	x	x	x
External alerter interface	x	x	x
Brandline insert	x	x	x
Note: In this table, x indicates available features for the telephone type listed in the top row.			

External Alerter interface

The External Alerter Board provides an interface to standard remote ringing devices, such as a ringing unit, installed in a location separate from the telephone. The External Alerter interface is not the remote ringer itself, but provides access to standard, off-the-shelf remote ringing devices. The Alerter Board requires additional power. See “Power requirements” on page 339.

You can program the External Alerter interface to activate a ringer (or light) when the telephone rings or when the telephone is in use (off-hook). For information on installing and setting up the External Alerter, see “Add-on modules” in “External Alerter Board” on page 179.

Brandline insert

The telephone contains a removable insert designed to accommodate custom labeling. You can order blank Brandline Inserts and have a printer silk screen your company logo on them.

Key Expansion Module

A 22-key unit module can be attached to any M3820 terminal. The extra keys can be assigned to any combination of lines and features. You can add up to

two expansion modules to a terminal. You will need a separate footstand for the module(s), one for a single module, one for a double.

Meridian Communications Adapter (MCA)

The MCA lets you connect your telephone to a personal computer or terminal. You can then use your telephone to exchange data between your computer and other computers. The MCA can be used with all three models.

Configuration and Installation

Configuration

Use LD 11 (Meridian Digital Telephone Administration) to configure the telephones. All prompts are defaulted (or set as required) except for those noted in the tables following:

LD 11 - M3110 Configuration (Part 1 of 2)

Prompt	Response	Description
REQ	NEW	
TYPE	2616	M2616 set model used
DES	M3110	Enter appropriate set identifier
CLS	HFA (HFD)	Group Listening Allowed (Denied)
	NDD	No digit display

LD 11 - M3110 Configuration (Part 2 of 2)

Prompt	Response	Description
KEY 08	NUL 09 NUL 10 NUL 11 NUL 12 NUL 13 NUL 14 NUL	Keys 8-14 programmed as NUL. If Group Listening is denied (CLS HFD), Key 15 is also programmed as NUL.
If Group Listening is denied (CLS HFD), Key 15 is also programmed as NUL.		

Figure 85
M3110 Key Designation

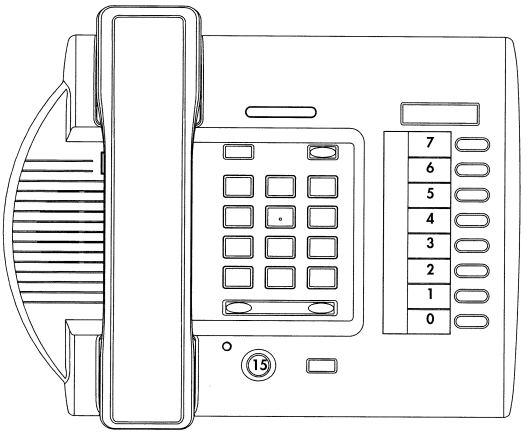

553-AAA0722

Table 51
M3310 Configuration

Prompt	Response	Description
REQ	NEW	
TYPE	2616	M2616 set model used
DES	M3310	Enter appropriate set identifier
CLS	HFA (HFD)	Handsfree Allowed (Denied)
KEY	08 NUL	Keys 8-14 programmed as NUL. If Handsfree is denied (CLS HFD), Key 15 is also programmed as NUL.
	09 NUL	
	10 NUL	
	11 NUL	
	12 NUL	
	13 NUL	
	14 NUL	

Figure 86
M3310 Key Designations

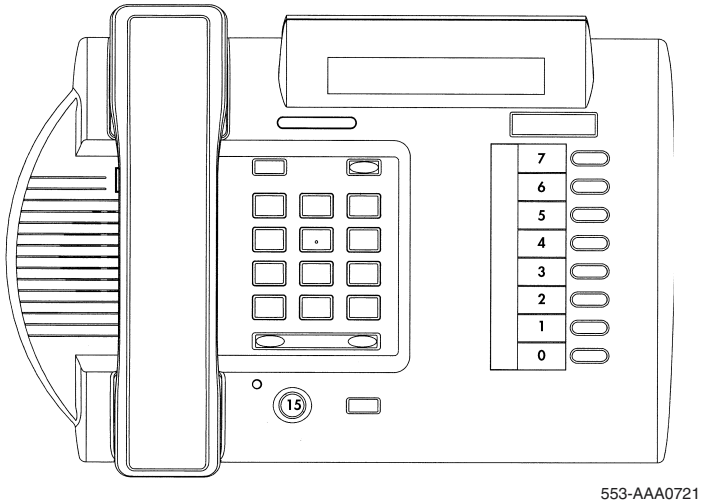

Table 52
M3820 Configuration

Prompt	Response	Description
REQ	NEW	
TYPE	2616	M2616 set model used.
DES	M3820	Enter appropriate set identifier.
CLS	HFA (HFD)	Handsfree Allowed (Denied)
	AHA	Automatic Hold Allowed
	DNDD	Dialed Name Display Denied
	CNDA	Call Party Name Display Allowed
	CNIA	Call Number Information Allowed
	LNA	Last Number Redial Allowed
KEY	01 NUL	Keys 01 programmed as NUL. If Handsfree is denied (CLS HFD), Key 15 is also programmed as NUL. Note: If short hunt is configured, then Key 01 must be configured as an SCR key with the same DN as key 0. For MARP to operate with short hunt configured, Key 01 must be configured as the MARP key.

Figure 87
M3820 Key Designations

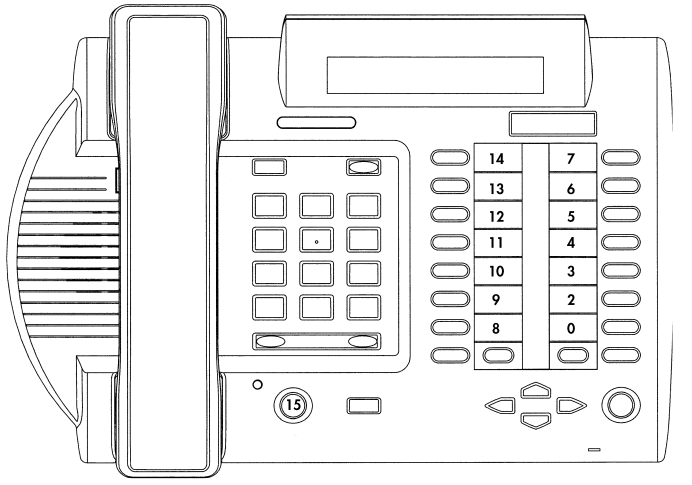

LD 20 – Print Routine

Prompt	Response	Description
REQ	PRT	
TYPE	2616	M2616 set model used.
DES	M3110 M3310 M3820 M3+	Enter appropriate set identifier Or M3+ to get a list of all three set types.

Installation

Procedure 56
Installing Meridian European digital telephones

Follow this procedure to install the Meridian European digital telephones:

1. Complete the wiring and cross-connections (loop power) before connecting the telephone to the connecting block.
2. Place the telephone on the desk in the normal operating position.
3. Place the Rls and Hold key caps on their positions just above the dialpad, with the Hold key closest to the handset.
4. Print the directory number on the designation card. Remove the number lens from its position underneath the handset, insert the designation card and snap the lens into place.
5. Print the feature keys on the label strip. Remove the label lens (beside the feature keys), insert the label strip and snap the lens into place.
6. Plug the line cord connector into the connecting block.
7. Perform the self test and acceptance procedures for Meridian Modular telephones (see “M2000 Series Meridian Digital Telephones self-test” on page 57.
8. Supply the user with a quick reference card.

End of Procedure

Installing hardware options

This section describes procedures for installing the following options:

- Power Board on all models.
- Headset on M3310 and M3820 telephones.
- Wallmount/Desktop Position change.

For installation of other options (MCA data option, external alerter and key expansion modules) see the section on Add-on modules for Meridian Modular Telephones (NT2K models) in the “M2000 add-on modules” on page 113 &c.

Procedure 57
Installing the Power Board

1 Open the Telephone.

a. Place the telephone, upside-down, on a padded, level surface.

b. Using a #1 Phillips screwdriver, remove the two screws holding the footstand (if fitted).

c. Disconnect and remove all cords including the handset and headset if fitted, from the telephone.

d. Use a #1 Phillips screwdriver and remove the four screws holding the base of the telephone.

2 Install the Power Board.

a. Remove the cable from the power board including the right angle header.

b. Disconnect the display cable from P4 on the main PCB. Note the orientation of this connector.

c. Place the power board to the left of the main PCB with the widest section of the power board nearest the display. Make sure that the display cable comes over the power board.

d. Clip the power board in place, by inserting the right hand side of the board under the clip, then push down on the left hand side adjacent to the clips provided.

e. Use a #1 Phillips screwdriver and the screw supplied to fasten the power board to the front cover of the telephone.

f. Remove and discard the two links on J8 on the telephone's main PCB.

g. Connect the power board cable (B0247405) to J8.

h. Note the key to prevent misconnection.

i. Connect the cable to the header at H1 on the power board as shown in the figure below).

j. Reconnect the display cable to P4.

Note: Do NOT twist the cable.

3 Reassemble the Telephone.

a. Replace the base cover and make sure that the cables lie flat.

b. Insert the four screws to secure the base.

c. Assemble the MCA to the footstand using the two screws provided.

d. Connect the cable to the 8 way jack on the base of the telephone.

e. Reconnect all cords to the telephone.

f. Replace the footstand with the two screws (if previously fitted).

g. Place the power board label on the footstand for tracking purposes.

End of Procedure

Figure 88
Power Board Installation

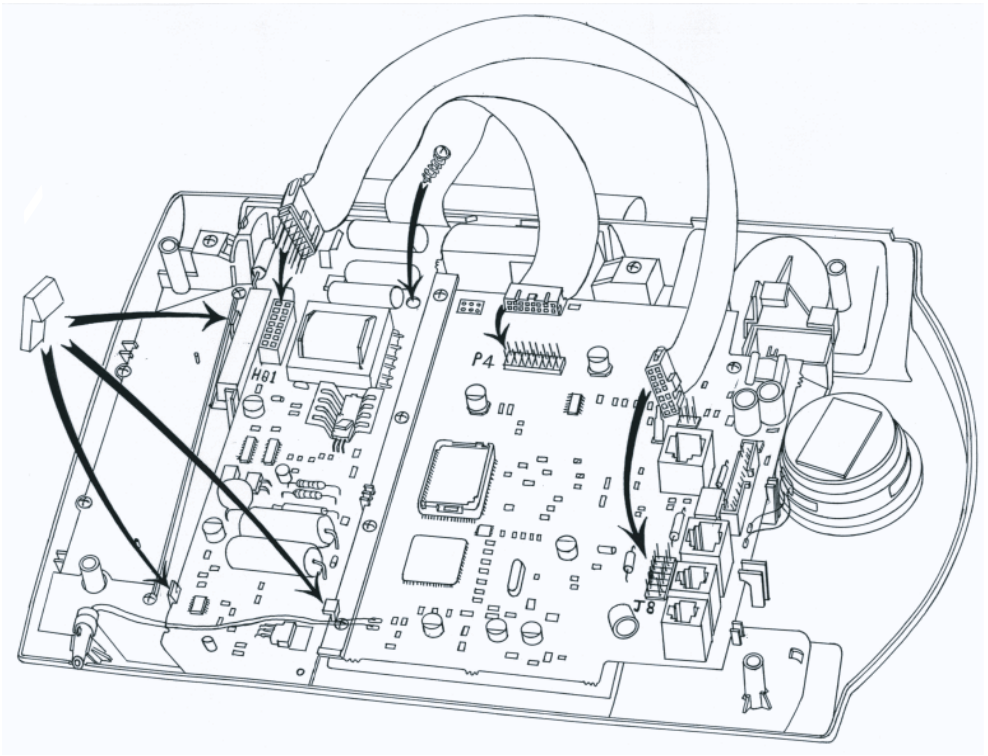

553-AAA0723

Procedure 58
Adding a Headset (M3310 and M3820 only)

Use the following procedure to add a headset to a Meridian telephone:

1. Unplug the line cord from the connecting block.
2. Remove the handset and place the telephone upside down on top if a level, solid work surface covered with soft material or paper to prevent damage to moveable keys and the telephone face.
3. Remove the 2 screws from the telephone footstand (if fitted) to separate the footstand from the telephone.

4 Plug the headset TELADAPT connector into the socket on the base of the telephone marked with a headset icon.

5 Route the headset cord through the channels at the side of the telephone.

6 Replace the footstand in the same position and tighten both screws (if previously fitted).

7 Place the telephone back on the desk in the normal operating position.

8 Plug the line cord connector back into the connecting block.

End of Procedure

Telephone Positions

Your Meridian telephone can be installed in three different positions - two desktop positions and a wall mount position. The two desktop positions provide two different angles for the telephone on the desktop. The telephone is supplied in the steeper of the two positions. Follow Procedure 59 for adjustment to the shallow-angel position, and Procedure 60 on page 336 for wall mounting.

Procedure 59
Adjusting the telephone to the desktop shallow-angle position

The procedure to change to the more shallow angle is as follows:

1 Unplug the line cord from the connecting block.

2 Remove the handset and place the telephone upside down on top of a level, solid work surface covered with soft material or paper to prevent damage to moveable keys and the telephone face.

3 Remove the 2 screws from the telephone footstand (if fitted) to separate the footstand from the telephone.

4 Snap the footstand back into place using the alternate slots located closer to the back of the set and tighten the screws (if previously fitted).

5 Place the telephone back on the desk in the normal operating position.

6 Plug the line cord connector back into the connecting block.

End of Procedure

Procedure 60
Wall mounting the telephone

The procedure to wall mount the telephone by reversing the footstand is as follows:

1 Unplug the line cord from the connecting block.

2 Remove the handset and place the telephone upside down on top of a level, solid work surface covered with soft material or paper to prevent damage to moveable keys and the telephone face.

3 Remove the 2 screws from the telephone footstand (if fitted) to separate the footstand from the telephone.

4 Remove the wall mount clip located inside the footstand and insert the clip in the switchhook rest using the holes provided.

5 Rotate the footstand 180 degrees, snap the footstand back into place and tighten the screws. Note that the footstand must be screwed to the base for wall mounting.

6 Mount the telephone on the wall using the wall mount holes provided on the bottom of the footstand.

7 Plug the line cord connector back into the connecting block.

Note 1: The footstand cannot be reversed when the MCA data option or key expansion module is equipped so such telephones cannot be wall mounted.

Note 2: An additional clip is provided for wall mounting the telephone. This clip is attached to the switchhook rest to prevent the handset from slipping when mounted on the wall.

End of Procedure

Specifications

This section lists the specifications required for Meridian digital telephones.

Environmental and safety considerations

All Meridian digital telephones are designed to comply with:

EN 60950:1992 - Safety of Information Technology Equipment including Electrical Business Equipment.

EN 41003:1993 - Particular Safety Requirements for Equipment to be connected to Telecommunication Network.

Temperature and humidity

Operating state:	
Temperature range	0° to 50°C (32° to 104°F)
Relative humidity	5% to 95% (noncondensing). At temperatures above 34°C (93°F) relative humidity is limited to 53 mbar of water vapor pressure.
Storage:	
Temperature range	–50° to 70°C (–58° to 158°F)
Relative humidity	5% to 95% (noncondensing). At temperatures above 34°C (93°F) relative humidity is limited to 53 mbar of water vapor pressure.

Electromagnetic interference

All the digital telephones are designed to comply with:

EN 50082-1:1992 - Electromagnetic Compatibility - Generic immunity standard Part 1: Residential, commercial and light industry.

EN 50081-1:1992 - Electromagnetic Compatibility - Generic emissions standard. Generic standard class: Residential, commercial and light industry.

Line engineering

Meridian digital telephones use twisted pair wiring on transmission lines selected by the rules given in "Digital telephones line engineering" on page 493. The maximum permissible loop length is 3500 ft. (1067 m), assuming 24 AWG (0.5 mm) standard twisted wire with no bridge taps. A 15.5 dB loss at 256 kHz defines the loop length limit. (Longer lengths are possible, depending on the wire's gauge and insulation.) Table 53 gives detailed information on loop lengths.

Table 53
Loop lengths for Meridian digital telephones

	QPC578 A and B	QPC578 C +	NT8D02
PVC insulated cable (polyvinyl chloride)			
22 or 24 AWG	100–3000 ft. (30.5–915 m)	0–3500 ft. (0–1067 m)	0–3500 ft. (0–1067 m)
26 AWG	100–2100 ft. (30.5–640 m)	0–2600 ft. (0–945 m)	0–2600 ft. (0–793 m)
Note 1: No bridge taps or loading coils are allowed.			
Note 2: Effect of line protector at MDF reduces loop length by 500 ft.			

Note: Use only the line cord provided with the telephone. Using a cord designed for another telephone could result in damage to the cord.

Local alerting tones

Each telephone provides four alerting tones and a buzz sound. The system controls the ringing cadence by sending tone-ON and tone-OFF messages to the telephone. The alerting tone cadences cannot be changed from the telephone but can be altered for individual terminals by software controlled adjustments in the system. See *Software Input/Output: Administration* (553-3001-311). All other telephone tones, such as dial tone or overflow, are provided by the Succession 1000M, Succession 1000, and Meridian 1 systems from a Tone and Digit Switch.

Alerting tone characteristics

The tone frequency combinations are as follows:

Tone	Frequencies	Warble Rate (Hz)
1	667 Hz, 500 Hz	5.2
2	667 Hz, 500 Hz	2.6
:		
3	1600 Hz, 2000 Hz	5.2
4	1600 Hz, 2000 Hz	2.6
:		
3	333 Hz, 250 Hz	5.2
4	333 Hz, 250 Hz	2.6

A 500 Hz buzz signal is provided for incoming call notification while the receiver is off-hook.

Power requirements

The Meridian digital telephones are loop powered. Loop power, originating in the ISDLC or the DLC, consists of a 30 V dc power source and assumes a 3500 ft. (1219 m) maximum loop length of 24 AWG (0.5 mm) wire and a minimum 15.5 V dc at the telephone terminals.

> ***Note:*** The loop length limit is defined by a 15.5 dB loss at 256 KHz. Longer lengths can be determined using the wire's gauge and insulation.

Some configurations of telephones and options need more than basic loop power to operate. Table 54 lists the types of Meridian digital telephones and shows when additional power is needed to operate the telephone or its optional hardware. Power Supply Boards come installed in factory-assembled configurations that require additional power.

Note: If a power failure occurs, configurations that require loop power will continue to work only if the system has battery backup. Only those options that require additional power will cease to function.

Table 54
Power requirements, Meridian digital telephones

Telephone type	Loop power	Additional power (Power Supply Board)
M3820	Terminal, handsfree, headset, key expansion	MCA, External Alerter Interface
M3310	Terminal, headset, handsfree	MCA, External Alerter Interface
M3110	Terminal	MCA, External Alerter Interface

Power supply board

The power supply option consists of a power supply board that mounts inside the telephone, coupled with an external wall-mount transformer or closet power supply that provides power to the power supply board. The power supply board receives its power through pins 1 and 6 of the line cord.

The power supply board connects to the telephone through a 14-pin bottom entry connector.

Local plug-in transformer

A single winding transformer equipped with a 10 ft. (3 m) cord of 22 AWG two-conductor stranded and twisted wire with a modular RJ-11 duplex adapter can provide the additional power needed to operate the telephone and its options.

WARNING

Do not plug any equipment other than the terminal into the RJ-11 transformer adapter, as damage to equipment can result.

Figure 89
Configuration of local plug-in transformer

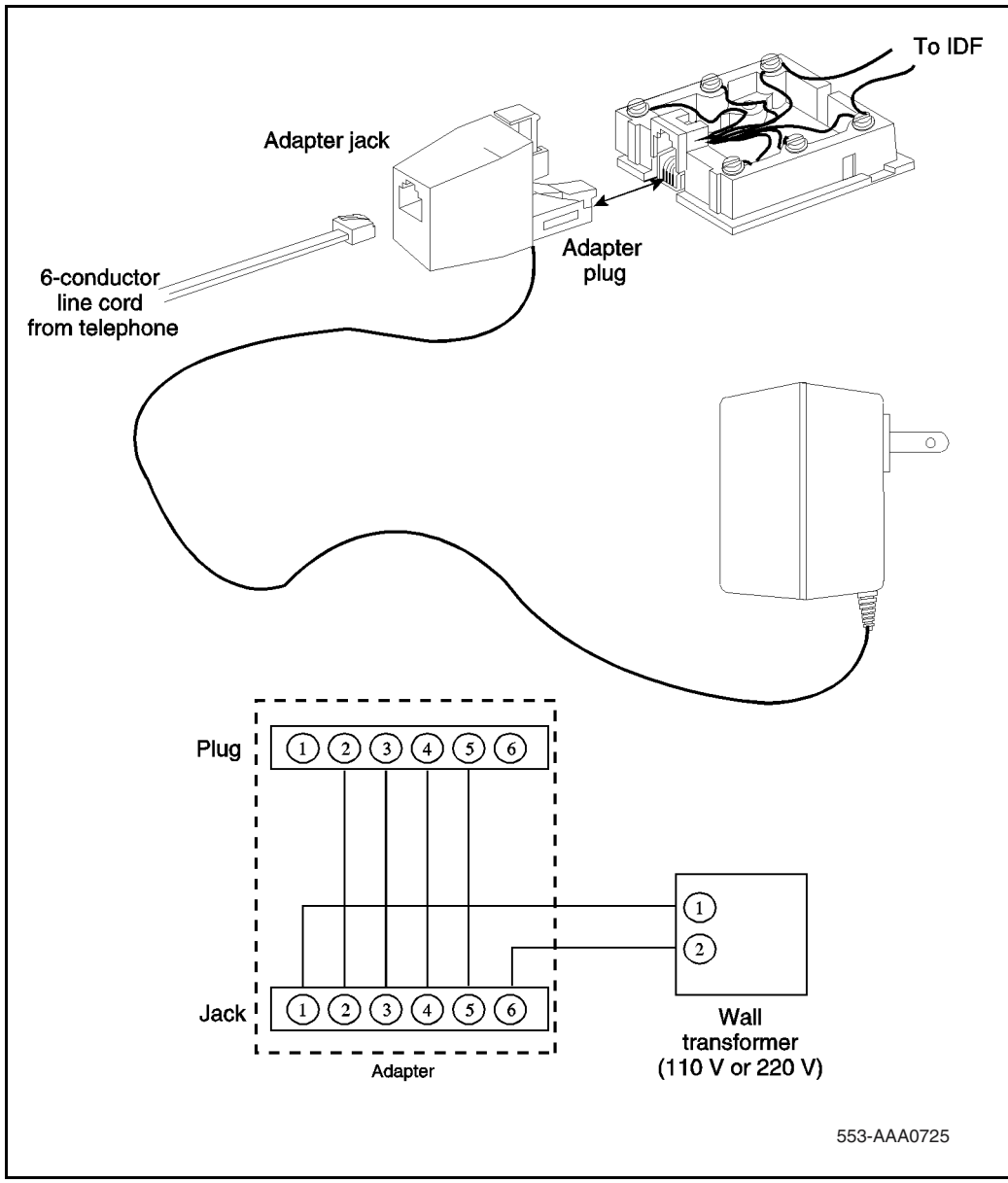

120 V transformer The following minimum specifications must be met by this transformer:

Input voltage	120 V ac/60 Hz
No load output voltage	29 V ac maximum
Voltage at rated current	26.7 V ac minimum
Rated load current	700 mA

240 V transformer The following minimum specifications have to be met by this transformer:

Input voltage	240 V ac/50 Hz
No load output voltage	29 V ac maximum
Voltage at rated current	26.7 V ac minimum
Rated load current	700 mA

Note 1: You cannot wall mount the telephone over the wall jack when using a transformer because of the size of the RJ-11 adapter. Hang it above or to the side of the jack and run the line and power cords to it.

Note 2: The above-mentioned transformers can also be used with outlets identified as 110V or 220V.

Closet Power Supply

Closet power can be obtained from an AC transformer for loops of 100 ft. (30 m) or less, or a DC transformer for loop lengths of 650 ft. (198 m) or less. An equivalent power source can be used but must be UL listed to provide isolation of outputs to the terminal. See Figure 90.

WARNING

When using closet power, do not plug the TELADAPT connector into any equipment other than the Meridian digital telephone, as damage to equipment may result.

Note 1: All terminals must be isolated from the input winding and each terminal must be isolated from all other terminal windings. A separate winding is required for each terminal, and grounds must not be connected.

Note 2: The QUT1 closet power supply source is not compatible with Meridian digital telephones.

The AC source must be rated at 29 V ac, 700 mA isolated. The DC source must be rated at 42 V dc, 300 mA isolated, with current limiting output of 1 amp.

Figure 90
Closet Power Supply configuration

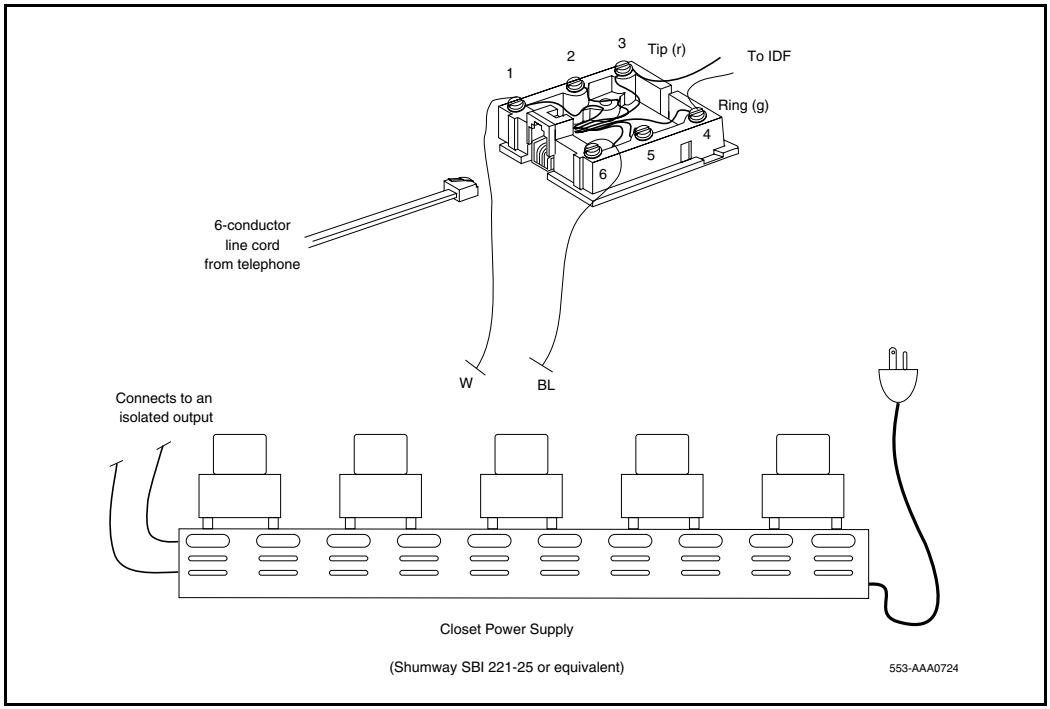

M3900 description

Contents

This section contains information on the following topics:

Introduction

The Meridian M3900 series of telephones consists of the following telephones:

- M3901: digital entry set for occasional use
- M3902: basic set for manufacturing floor, warehouse, and low telephone use
- M3903: enhanced set for office professionals and technical specialists
- M3904: professional set for Managers, Executives, Administrative Assistants
- M3905: call center set for Agents and Supervisors

Figure 93
M3903

Figure 91
M3901

Figure 92
M3902

Figure 94
M3904

Figure 95
M3905

Feature description

These sets are digital, integrated voice/data telephones with the following features:

Table 55
M3900 features (Part 1 of 2)

	M3901 entry level	M3902 basic	M3903 enhanced	M3904 professional	M3905 call center
lines supported	1	1	2	6	8
Programmable feature keys	5	3	4	4	4
fixed feature keys	no	Options/ Program, Message (with LED), Transfer (with LED)	Options/ Program, Message, Directory/ Log, Application, Shift		Supervisor, Emergency, Not Ready, Make Busy, In-calls
fixed keys for call processing	no	Hold, Good-bye, Smart Mute (with LED), Handsfree (with LED)	Hold, Good-bye, Smart Mute (with LED), Headset (with LED), Handsfree (with LED)		Hold, Good-bye, Smart Mute (with LED), Headset (with LED)
Supervisor Observe Key (with LED)	no	no	no	no	yes
fixed application keys	no	Up, Down, Left, Right	Up, Down, Left, Right, Quit, and Copy		
Display	no	(2 x 24): 1 Text Lines, 1 Label Line	(3 x 24): 1 Info Line, 1 Text Lines, 1 Label Line	(5 x 24): 1 Info Line, 3 Text Lines, 1 Label Line	(4 x 24): 1 Info Line, 2 Text Lines, 1 Label Line

Table 55
M3900 features (Part 2 of 2)

	M3901 entry level	M3902 basic	M3903 enhanced	M3904 professional	M3905 call center
Accessory Ports	no	1	2	2	2
Accessories	no	ATA, MCA, External Alerter & Recorder Interface	ATA, MCA, External Alerter & Recorder Interface	ATA, MCA, External Alerter & Recorder Interface, Key-based Add-on	
Headset	through MPA jack		Direct Connect		

Note: All sets are desk or wall mountable, have message waiting LED with visual ringing, and have volume control.

Communication

M3900 telephones communicate with the Succession 1000M, Succession 1000, and Meridian 1 through digital transmission over standard twisted pair wiring. M3900 telephones can interface with all versions of the Intelligent Peripheral Equipment (IPE) Digital Line Card (DLC). The DLC supports 16 voice ports and 16 data ports. The system software assigns a Terminal Number (TN) to each port in the system.

Feature enhancements

The following enhancements are available:

- Full Icon Support
- M3904 Hebrew Language support (Regional only).

Full Icon Support

Feature description

The M3900 Full Icon Support feature enables distinct icons and flashing cadences for the display of different call states. These icons are displayed for the Directory Number (DN) keys on the Phase II and Phase III M3903 and M3904 telephones, as well as the Phase III M3905 telephones.

The icons also display on the Key-based expansion modules and Display-based expansion modules. This feature allows the user to quickly determine the call state of a DN, instead of viewing just the flashing cadence of a single generic icon to determine the call state.

The functions displayed with the Full Icon support feature are: I-Ringing, I-Active, U-Active, I-Hold, and U-Hold. The icons appear on the LCD displays located next to the DN keys. The scenarios for these icons are as follows:

- **I-Ringing:** The I-Ringing icon is displayed on the ringing DN of a set that is being called.
- **I-Active:** The I-Active icon is displayed on DNs on sets in the active call state.
- **U-Active:** The U-Active icon appears on the MADN of a set when another set on the MADN is in the active call state.
- **I-Hold:** The I-Hold icon appears on the DN of the set that has a call on hold.
- **U-Hold:** The U-Hold icon appears on the MADN of a set when another set on the MADN has a call in the hold state.

The Ringing, I-Hold, U-Hold, and Active DN keys, represented by a generic icon in previous releases, displays the following icons with the Full Icon Support feature:

Table 56
Icons and Cadences

Call/Feature state	DN key icon	Cadence
Ringing		Flash
I-Hold		Wink
U-Hold		Flicker
I-Active		On
U-Active		On

Operating parameters

The following systems support the M3900 Full Icon Support feature:

- Succession 1000M Cabinet or Meridian 1 Option 11C Cabinet
- Succession 1000M Chassis or Meridian 1 Option 11C Chassis
- Meridian 1 Option 61C CP PII
- Meridian 1 Option 81C CP PII

The M3900 Full Icon Support feature applies to the following:

- Phase II and Phase III M3903 and M3904 sets
- Phase III M3905 sets
- Key Based Expansion Module (KBA) or Display Based Expansion Module (DBA) accessories.

The Full Icon Support feature does not support IP telephones, M3901, or M3902 sets.

The M3900 Full Icon Support feature requires a minimum of Release 9 of the Key Based Expansion module (KBA).

Feature interactions

There are no feature interactions associated with this feature.

Feature packaging

The M3900 Full Icon Support feature requires the following packages:

- M3900 Full Icon Support (ICON_PACKAGE) package 397
- Digital Sets (DSET) package 88

Feature implementation

Use LD 17 to enable M3900 Full Icon Support:

LD 17 - Enable M3900 Full Icon Support

Prompt	Response	Description
REQ	CHG	Change existing data.
TYPE	PARM	System Parameters
.....		
ICON	(NO) YES	Enable the M3900 Full Icon Support feature. NO = Disable the M3900 Full Icon Support feature.

Feature operation

No specific operating procedures are required to use this feature.

Functional description

The specific characteristic of the five models of the M3900 Series telephones is found on the following pages. Refer to:

- “M3901” on page 361
- “M3902” on page 362
- “M3903” on page 364
- “M3904” on page 366
- “M3905” on page 368

The M3900 Series Meridian Digital Telephones support features through:

- Fixed Feature Keys
- Programmable Line/Feature Keys (soft-labeled)
- Programmable Soft Keys (soft-labeled) (M3902 and M3905)
- Context Sensitive Soft Keys (M3903, M3904, and M3905)
- Applications Key
  - Set-to-Set Messaging (M3903, M3904, and M3905)
  - Corporate Directory (M3903, M3904, and M3905)
- See also M3900 “Physical description” on page 369

Feature keys

Personal Directory

With M3900 Phase III, press the Directory/Log fixed feature key to access the Personal Directory on M3904 sets. On M3905 sets, press the Directory self-labelled programmable feature key. You do not have to press the Select key after pressing the Directory/Log or DIR/LOG key. Once you press the Directory/Log or DIR/LOG key, you can immediately begin a search using the dial pad keys, provided that Personal Directory was highlighted in the selection list.

Note: M3900 Phase III allows you to perform a three-letter search in the Personal Directory.

The Fixed Feature Keys (see Table 57) are the feature keys on the M3900 Series Meridian Digital Telephone that are prelabeled with the assigned feature. The Fixed Feature Keys appear on the telephone with text or icon labels. Telephones with icon labels are only available in specific market areas.

Table 57
Fixed Feature Key text and icon labels (Part 1 of 3)

Feature	Text Key Label	Icon Key Label
Goodbye	Goodbye	
Hold	Hold	or
Mute	Mute	
Handsfree		
Volume		
Headset	Headset	
Options	Options	
DN line	Line	

Table 57
Fixed Feature Key text and icon labels (Part 2 of 3)

Feature	Text Key Label	Icon Key Label
Feature (M3901)	Feature	Fx
Message	Message	
Directory/Log (M3904)	Directory/Log	
Call Log (M3903)	Call Log	
Shift	Shift	
Application	Applications	
Navigation		
Copy	Copy	
Quit	Quit	Quit
Transfer (M3902)	Transfer	
InCalls (M3905 Call Center)	In - Calls	
Not Ready (M3905 Call Center)	Not Ready	

Table 57
Fixed Feature Key text and icon labels (Part 3 of 3)

Feature	Text Key Label	Icon Key Label
Make Busy (M3905 Call Center)	*Make Busy*	
Call Supervisor (M3905 Call Center)	*Supervisor*	
Answer Agent (M3905 Call Center)	*Ans Agent*	
Activity Code (M3905 Call Center)	*Activity*	
Answer Emergency (M3905 Call Center)	*Ans Emerg*	
Emergency (M3905 Call Center)	*Emergency*	
Observe Agent (M3905 Call Center)	*Obv Agent*	
Display Queue (M3905 Call Center)	*Dsply Queue*	
Note: Icon key labels are available in specific markets areas.		

Programmable Line/Feature Keys (soft-labeled)

The Programmable Line/Feature Keys (soft-labeled) are the keys located at the left and right sides of the upper section of the display area. The user can

change the LCD label of these keys (with the exception of the primary Directory Number Key) to meet their business needs.

The Programmable Line/Feature Key (soft-labeled) provides two layers of functionality on the M3903 and M3904. The two layer keys on the M3903 and M3904 provides the user access to two Lines/Features per key. For example, the M3904 has six Programmable Line/Feature Keys (soft-labeled), which provide the user with 12 line/feature keys accessible on the six keys.

Soft Keys (soft-labeled)

The Soft Keys (soft-labeled) are the three (M3902) or four (M3903, M3904, and M3905) keys located below the display on the M3900 Series Meridian Digital Telephones. The labels and corresponding functionality of these keys change depending on the features available or the application in use.

Programmable Features

The M3901 can have five Programmable Features assigned. The user activates the features by pressing the Feature Key and assigned key pad keys as indicated by the Feature Card. The system administrator programs selected features for the M3901 telephone.

For feature key assignment information see:

- Table 60 on page 378
- Table 61 on page 379
- Table 62 on page 381
- Table 63 on page 385
- Table 64 on page 388

The Meridian M3900 series of telephones consists of the following telephones:

- M3901: digital entry set for occasional use
- M3902: basic set for manufacturing floor, warehouse, and low telephone use
- M3903: enhanced set for office professionals and technical specialists

- M3904: professional set for Managers, Executives, Administrative Assistants
- M3905: call center set for Call Center Agents and Supervisors

Enhancements

The following enhancements are available on the M3900 Series telephones:

- Context Sensitive Soft Keys (M3903 and M3904)
- Set-to-Set Messaging (M3903 and M3904)
- Corporate Directory (M3903 and M3904)
- Virtual Office (M3903 and M3904)
- Support for the Display-based Expansion Module accessory (M3904 and M3905)
- Flash Download of firmware to M3902, M3903, M3904 and M3905 telephones
- Language selection, during software installation, for M3900 Series telephone displays
- Full Duplex Handsfree (M3904 Phase III)
- System-Initiated Language Selection (M3902, M3903, M3904, and M3905)
- Call Forward Enhancements (M3903, M3904, and M3905)
- 31-digit dialing (M3902, M3903, M3904, and M3905)
- Callers List soft key (M3903, M3904, and M3905)
- Redial List soft key (M3903, M3904, and M3905)
- Pause in Dialing String (M3902, M3903, M3904, and M3905)
- Special Character Support (M3902, M3903, M3904, and M3905)
- Headset State Support (M3903, M3904, and M3905)
- Set-to-Set Messaging Enhancements (M3903, M3904, and M3905)
- One-button Feature Access to Corporate Directory (M3903, M3904, and M3905)

- Corporate Directory Search Enhancement (M3903, M3904, and M3905)
- Virtual Office Enhancements (M3903 and M3904)
- Virtual Office Clearing of the Callers List and Redial List (M3903 and M3904)
- Context Sensitive Soft Keys (M3905)
- Automatic Logout for Virtual Office
- Speed Call for Virtual Office
- System-Initiated Language Download
- Set-to-Set Messaging Enhancements
- Personal Directory fixed feature key

M3901 Entry Telephone features

The features of the M3901 include:

- one line Directory Number (DN) capability
- five programmable features
- Fixed Feature Keys: Line, Feature, Hold, Goodbye, and Volume control
- Feature Activation and Message Waiting/Incoming Call Status Indicator LED
- support for an amplified headset

Figure 96
M3901

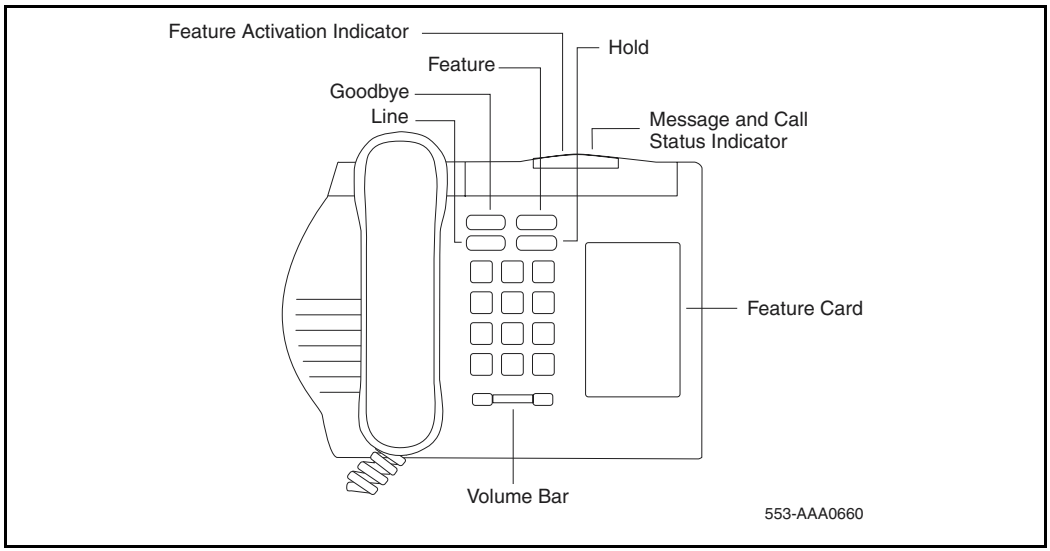

M3902 Basic Telephone

The features of the M3902 include:

- one line Directory Number (DN) capability
- three Programmable Soft Keys (soft-labeled)
- Fixed Feature Keys: Options, Message, Transfer, Goodbye, Hold, “Smart” Mute, and Volume control
- two lines by twenty-four character display area
- Group Listening
- on-hook dialing
- support for an amplified headset
- one accessory port
- handsfree calling option with LED

Figure 97
M3902

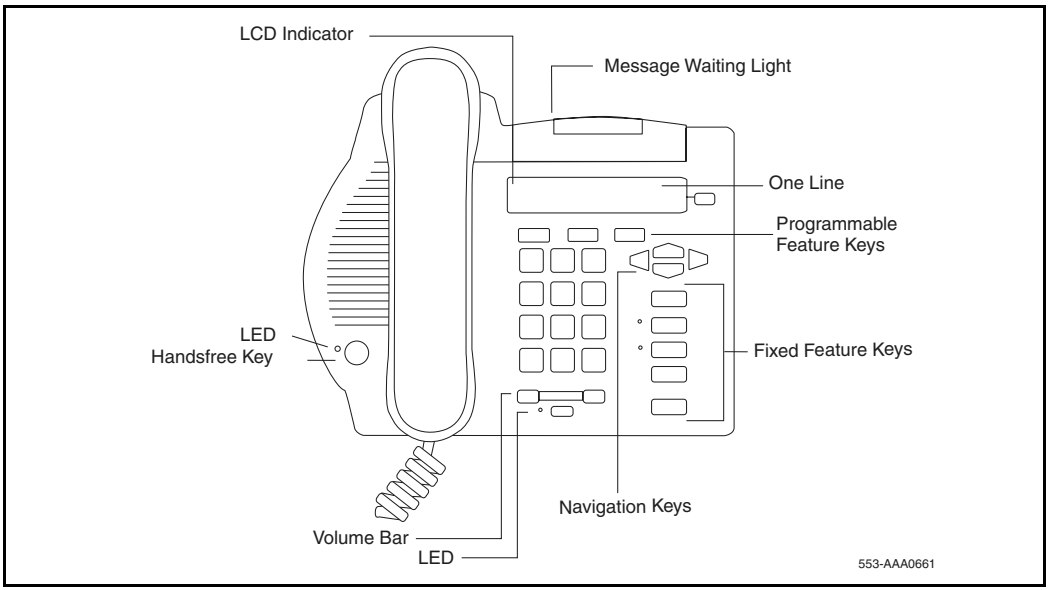

M3903 Enhanced Telephone

The features of the M3903 include:

- two Programmable Line/Feature Keys (soft-labeled) which have two layers each, giving the user access to four Line/Feature keys
- four Context Sensitive Soft Keys (soft-labeled) that change functionality depending on the features available or the application in use
- Handsfree calling with LED
- Fixed Feature Keys: Goodbye, Message, Call log (including Redial List), Applications, Shift, Goodbye, Hold, “Smart” Mute, and volume control
- Navigation cluster, Quit, and Copy
- three line by twenty-four character display area
- Call Log (includes Redial List)
- Group Listening
- on-hook dialing
- two accessory ports
- support for an amplified or unamplified headset
- Direct Connect Headset port
- Full Icon support (with expansion module)

Figure 98
M3903

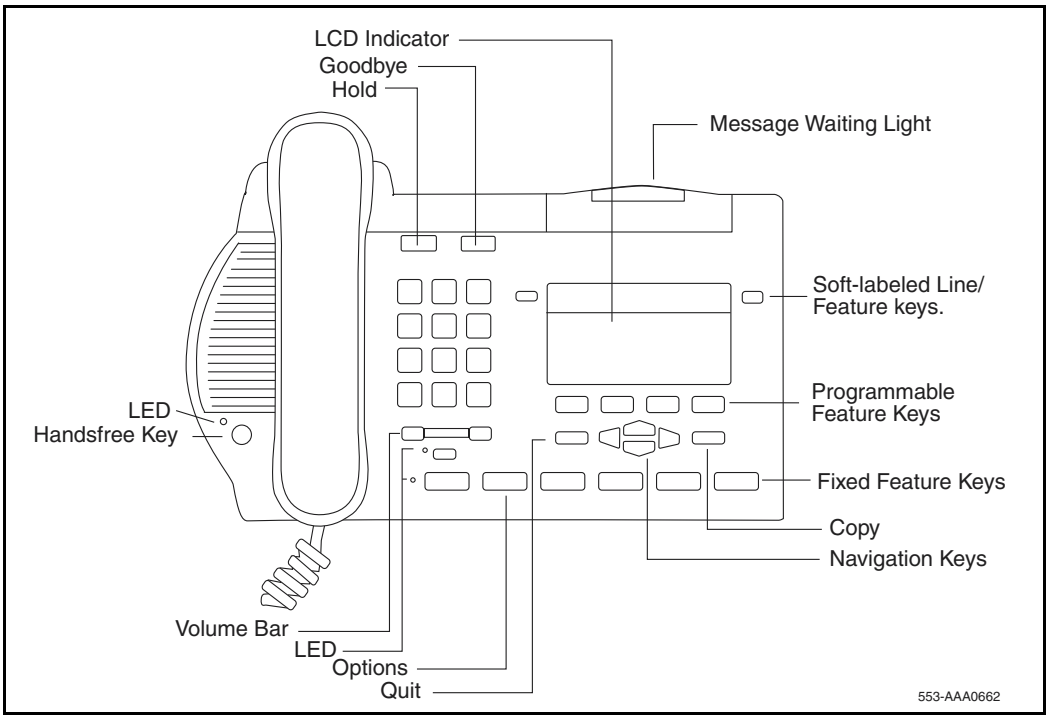

M3904 Professional Telephone

The features of the M3904 telephone include:

- six Programmable Line/Feature Keys (soft-labeled) which have two layers each, giving the user access to 12 Line/Feature keys
- four Context Sensitive Soft Keys (soft-labeled) that change functionality depending on the features available or the application in use
- Handsfree Calling with LED
- Fixed Feature Keys: Options, Message, Directory/Log (including Redial List), Applications, Shift, Goodbye, Hold, “Smart” Mute, Volume control
- Navigation cluster, Quit, and Copy
- five line by twenty-four character display
- Personal Directory
- Call Log (includes Redial List)
- Group Listening
- on-hook dialing
- two accessory ports (support for an amplified/unamplified headset)
- Direct Connect Headset port
- Full Icon support (with expansion modules)

Figure 99
M3904

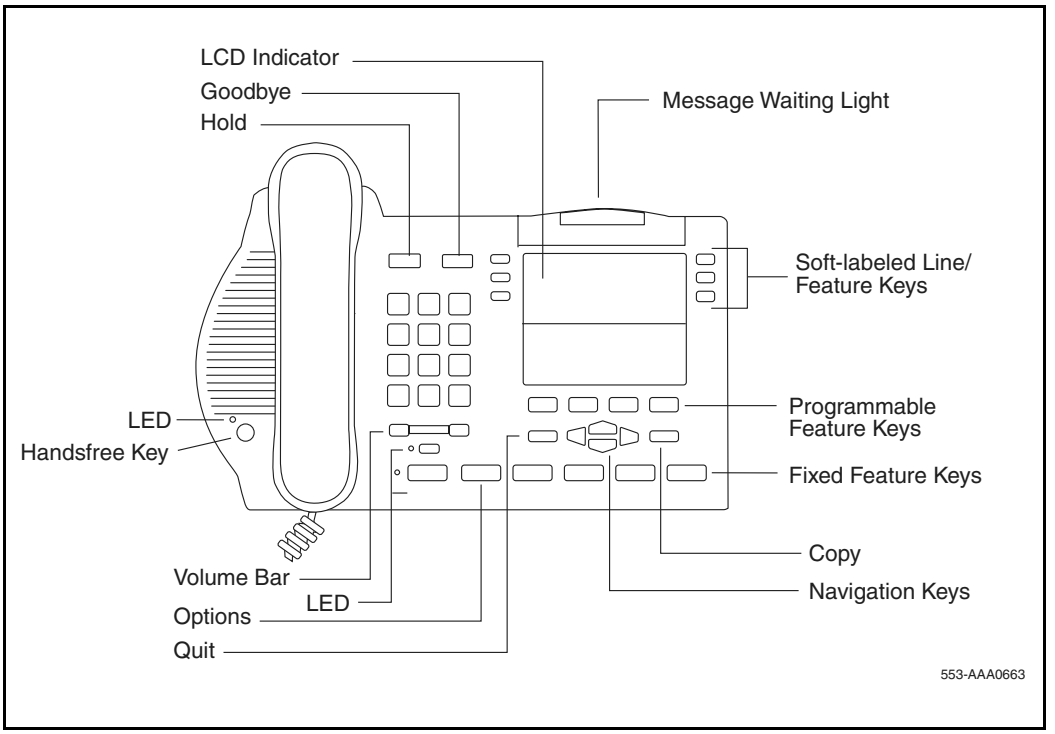

M3905 Call Center Telephone

The features of the M3905 Call Center Telephone include:

- eight Programmable Line/Feature Keys (soft-labeled), giving the user access to eight Line/Feature Keys
- four Context Sensitive Soft Keys (soft-labeled) that change functionality depending on the features available or the application in use
- Fixed Feature Keys with LED: Headset, Supervisor, Emergency, Not Ready, Make Busy, In-Calls, goodbye, Hold, “Smart” Mute, Volume control
- Navigation cluster, Quit and Copy
- four line by twenty-four character display
- an optional handset
- two accessory ports (supports amplified/unamplified headset)
- Supervisor Observe Key with LED
- Full Icon support (with expansion modules)
- Supervisor Headset Observe port

Figure 100
M3905

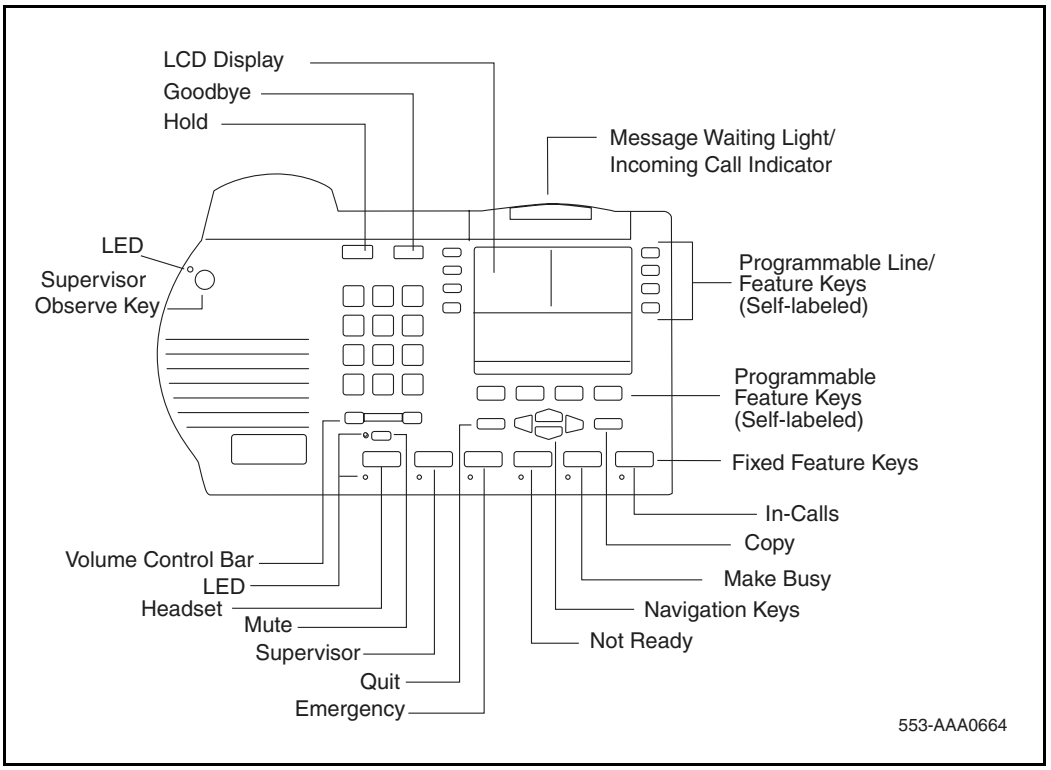

Note: The system administrator can configure four of the bottom six Fixed Feature Keys (Make Busy, Not Ready, Supervisor and Emergency) to Feature Keys that suit the business needs of the Call Center user.

Physical description

Table 58 lists the features and optional hardware available for each M3900 series telephone.

Table 58
M3900 Series telephone accessories compatibility (Part 1 of 2)

Accessory	X11 release introduced	M3900 phase introduced	M3902	M3903	M3904	M3905
Accessory Connection Module (ACM)			NA	Supports	Supports	Supports
Analog Terminal Adapter (ATA)	Release 24.24	Phase I	Supports	Supports	Supports	Supports
Computer Telephony Integration Adapter (CTIA)	Release 25.40	Phase 3	Supports	Supports	Supports	Supports [1]
Display-based Expansion Module (DBA)	Release 25.10	Phase 2	NA	NA	Supports	Supports [1]
Key-based Expansion Module	Release 24.24	Phase 1	NA	Supports	Supports	NA
External Alerter and Recording Interface	Release 24.24	Phase 1	Supports	Supports	Supports	Supports
Full Duplex Handsfree	Release 25.40	Phase 3	Supports	NA	NA	NA
Personal Directory PC Utility	Release 24.24	Phase 1	Supports	Supports[1]	NA	NA
Headset (non-amplified) connects thought he direct connect headset jack			NA	NA	Supports	Supports

Table 58
M3900 Series telephone accessories compatibility (Part 2 of 2)

Accessory	X11 release introduced	M3900 phase introduced	M3902	M3903	M3904	M3905
Headset (amplified) connects through the headset jack			Supports	Supports	Supports	Supports
Handset			Standard	Standard	Standard	Standard
M3905 Phase III firmware and software are required to support the Personal Directory PC Utility, DBA, and CTIA accessories.						

Accessory Connection Module (ACM)

The Accessory Connection Module provides the interface for adding the Analog Terminal Adapter, External Alerter and Recorder Interface, Computer Telephony Integration Adapter, and Personal Directory PC Utility. The ACM is available for the M3902, M3903, M3904 and the M3905. The ACM requires a wall transformer to power any of the accessory cartridges. You must order the wall transformer separately from your Nortel Networks distributor to power the ACM and/or the M3900 accessories.

Table 59
Accessory compatibility (Part 1 of 2)

	ATA	Key-based Expansion Module	Personal Directory PC Utility	External Alerter and Recording Interface	Display-based Expansion Module	CTIA
Analog Terminal Adaptor (ATA)	NA	YES	YES	YES	YES	YES
Key Expansion Module (2)	YES	NA	YES	YES	NO	YES

Table 59
Accessory compatibility (Part 2 of 2)

	ATA	Key-based Expansion Module	Personal Directory PC Utility	External Alerter and Recording Interface	Display-based Expansion Module	CTIA
Personal Directory PC Utility	YES	YES	NA	YES	YES	YES
External Alerter and Recording Interface	YES	YES	YES	NA	YES	YES
Display Expansion Module (1)	YES	NO	YES	YES	NA	YES
Computer Telephony Integration Adapter (CTIA)	YES	YES	YES	YES	YES	NA
Full Duplex Handsfree	YES	NA	YES	YES	NA	YES
Note: Not all of the above accessories are supported on all telephones in the M3900 Series portfolio.						

Alternate key caps for the M3905

The M3905 Call Center Telephone provides an alternate key cap kit to customize your M3905 telephone to fit your business needs. Use the Key Cap Tool to remove any of the middle four fixed programmable keys, located at bottom front of the M3905, and replace them with alternate keys. The alternate key caps include: Answer Emergency, Answer Agent, Activity Code, Call Agent, Observe Agent, and Display Queue.

Analog Terminal Adapter (ATA)

The Analog Terminal Adapter (ATA) lets you connect an analog device such as a fax machine or modem to your telephone. You can have simultaneous use of the telephone and the analog device. The ATA is available for the M3902, M3903, M3904 and the M3905 models.

Computer Telephony Integration Adapter (CTIA)

The Computer Telephony Integration Adapter (CTIA) along with the TAPI software provides an interface to connect a Personal Computer (PC) to the M3900 telephone.

An RS-232C cable is required to connect the PC to the CTIA. The CTIA connects to the M3900 Series telephone through the Accessory Connection Module (ACM). The CTIA is a small cartridge accessory and can be inserted into either the small or large footstand opening.

The CTIA is powered through the ACM. The ACM receives power through the telephone via the telephone line cord which is connected to a Teladapt wall transformer power supply (see Figure 108 on page 402). Check with your Nortel Networks distributor for the recommended wall transformer for the M3900 accessories. Install the Accessory Connection Module (ACM) into your M3900 Series Meridian Digital Telephone (refer to the ACM Installation Sheet) before you install your CTIA.

The CTIA cartridge provides the user:

- connectivity to the PC
- voice call control

Telephone Application Programming Interface (TAPI) software

TAPI software accompanies your CTIA Cartridge. The TAPI software allows a user to program telephone-line-based devices to work independently from their computer or other devices.

Personal Directory PC Utility Software

In addition to the TAPI software which is included with the CTIA, you may wish to purchase the Personal Directory PC Utility Software. The Personal Directory PC Utility software uses your CTIA Cartridge to connect your PC and M3904 telephone so that you may exchange data between your PC and your telephone's directory. For more information see Personal Directory PC Utility.

Personal Directory PC Utility

The Personal Directory PC Utility software provides a faster, easier way to create or modify a Personal Directory on the M3904 and M3905 telephones. You can enter names and numbers into a Personal Directory file on your Personal Computer (PC). You can download (program) the PC file directly to the M3904 and M3905 telephones. You can upload (read) a directory from the M3904 and M3905 telephones to your PC to modify the directory.

An RS-232C cable is required to connect the PC to the Personal Directory PC Utility Interface Cartridge. The cartridge connects to the M3900 Series telephone through the Accessory Connection Module (ACM). The Personal Directory PC Utility Interface Cartridge is a small cartridge accessory and can be inserted into either the small or large footstand opening.

The Personal Directory PC Utility Interface Cartridge is powered through the ACM. The ACM receives power through the telephone via the telephone line cord which is connected to a Teladapt wall transformer power supply (see Figure 108 on page 402). Check with your Nortel Networks distributor for the recommended wall transformer for the M3900 accessories. You must install the Accessory Connection Module (ACM) into your M3900 Series Meridian Digital Telephone (refer to the ACM Installation Sheet) before you install your Personal Directory PC Utility Interface Cartridge.

> ***Note:*** The CTIA Cartridge and the Personal Directory PC Utility Interface Cartridge are identical.

The Personal Directory PC Utility supports the following languages: English, French, Spanish, German, Danish, Portuguese, Italian, Norwegian, Swedish, Finnish, Dutch. The default language is English.

Expansion Modules

Display-based Expansion Module

The Display-based Expansion Module (DBA) provides additional Line/ Programmable Feature Keys (soft-labeled) for the M3904 and M3905. The DBA supports up to 3 layers of 8 additional keys for a total of 24 keys.

> ***Note:*** Refer to Table 59 on page 370 for a list of the telephones with which the Display-based Expansion module is compatible.

A Page fixed key located on the DBA allows a user to switch between the three layers of soft-labeled Programmable Feature Keys. Visual indication is also provided to indicate which page (or layer) of soft-labeled Programmable Feature Keys is in use. Feature activation and deactivation on the DBA Keys is the same as the Programmable Feature Keys on the M3904 and M3905.

The user may change the feature key labels by selecting “Change feature key label” from the Options List on the M3904 or M3905.

The Display-based Expansion Module is only supported on the M3904 and M3905. You can attach a maximum of one Display-based Expansion Module to an M3904 or M3905 set.

Key-based Expansion Module

The Key-based Expansion Module (KBA) attaches to the M3904 and M3905 Meridian Digital Telephones. The KBA provides 22 additional Line/Feature Keys. You can attach a maximum of two Key-based Expansion Modules to the M3904 and M3905.

External Alerter and Recording Interface

The External Alerter and Recording Interface provides an interface for a remote ringer device installed in a location separate from the telephone. The External Alerter and Recording Interface provides access to a standard, off-the-shelf remote ringer, call status relay, audio recorder or visual indicator.

You can program the External Alerter interface to activate a ringer (or light) when the telephone rings or when the telephone is in use (off hook).

> ***Note:*** The External Alerter is an interface only, the ringer, light, buzzer etc. is available through a third party vendor.

Handset option for the M3905 Call Center Telephone

The Handset does not accompany the M3905 Call Center Telephone. The Handset kit is a hardware option for the M3905 Call Center Telephone. The handset can be added to the M3905 by removing the front plate of the telephone. A handset kit is available for the M3905.

Headset options

The M3901, M3902, and M3904 supports an amplified headset when the headset connects to the handset jack.

On a M3905, plug the amplified headset into the headset port. Do not plug an amplified headset into the handset jack.

The M3903, M3904 and M3905 have a dedicated headset jack which supports a non-amplified headset. The M3903, M3904 and M3905 have a Headset Fixed Feature Key to turn the Headset on and off.

Contact your Nortel Networks distributor for recommended headset equipment.

Telephone Wall Mount Kit

The telephone wall mount bracket kit contains a one piece wall mount plate that attaches the M3903, M3904 and M3905 telephone to the wall. The Wall Mount Kit is available from your local Nortel Networks distributor. The M3901 and M3902 have built in wall mount brackets.

Full Duplex Handsfree

The Full Duplex Handsfree (FDHF) functionality allows simultaneous two-way communication during a handsfree call. For Full Duplex Handsfree

functionality, you require an M3904 Phase III set equipped with an FDHF cartridge.

The FDHF functionality requires the following hardware:

- M3904 Phase III set (NTMN34GA)

  Note: NTMN34TA is the M3904 Phase III Icon set.

- Full Duplex Handsfree cartridge (NTMN72AA)
- Accessory Connection Module (ACM) (NTMN71AA)
- One of the following wall transformers to power the FDHF cartridge:

  — 110V wall transfer (NTMN80AA)

  — 220V wall transformer (NTMN80BA)

  — EU 230V wall transformer (NTHC09AA)

  — UK 230V wall transformer (NTHC08AA)

Brandline insert

The M3901 Series Meridian Digital Telephone contains a removable insert made to accommodate your company logo.You can order blank Brandline Inserts with your company logo. The M3903, M3904 and M3905 supports electronic brandline.

Meridian Communications Adapter (MCA)

The Meridian Communications Adapter lets the user connect the telephone to a personal computer or terminal. This allows the telephone to exchange data between your computer and other computers. The M3902, M3903, M3904, and M3905 models support the MCA.

Accessory Keying

A maximum of two cartridge accessories can plug into the slots at the rear of the terminal stand. The ports provide access to a SIDL/SDI ports, USART port, and GPIO0. Two accessories cannot access the same serial port. The mechanical keying prevents this situation from occurring. Refer to Figure 101 for a better understanding of mechanical keying.

Figure 101
M3900 Series mechanical keying

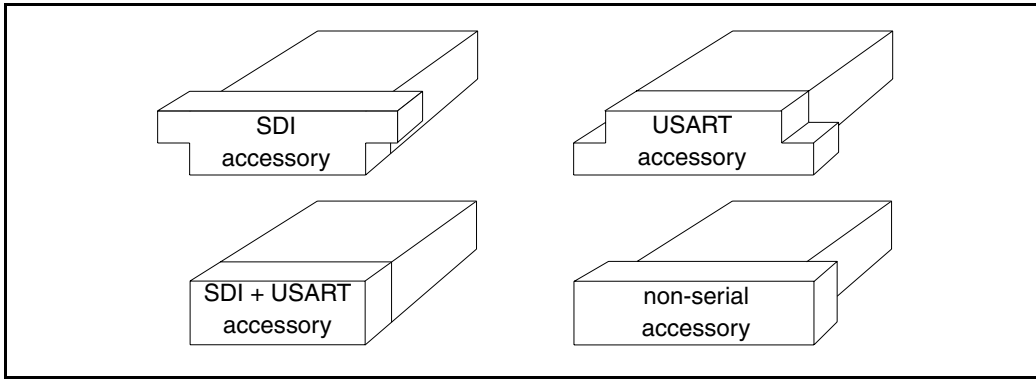

Key descriptions

This section provides key description and key configuration information for each model of the M3900 series. This section also shows the physical placement of the keys on each model: M3901, M3902, M3903, M3904, and M3905.

M3901 key descriptions

Table 60 gives a description of the keys on the M3901. Figure 102 on page 379 shows the physical placement of the keys on the M3901.

Table 60
M3901 key description

Key Number	Description
Key 0	Line (Directory Number). ***Note:*** The system administrator can configure Key 0 as a Voice Call (VCC), HotLine (HOT) Key, Single Call Non-ringing, Private Line Non-ringing, Multiple Call Non-ringing, Private Line Ringing, or Multiple Call Ringing.
Key 1	Feature or Auto Dial.
Key 2	Feature or Auto Dial.
Key 3	Feature or Auto Dial.
Key 4	Feature or Auto Dial.
Key 5	Feature or Auto Dial. ***Note:*** The system administrator can configure Keys 1 - 5 with any feature that does not require a display (DAG, DWG, DSP and RMK). ***Note:*** recommends that all features be used as Auto Dial.
	Note: Nortel Networks recommends that the M3901 is not configured as an ACD DN.

Figure 102
M3901 key positions

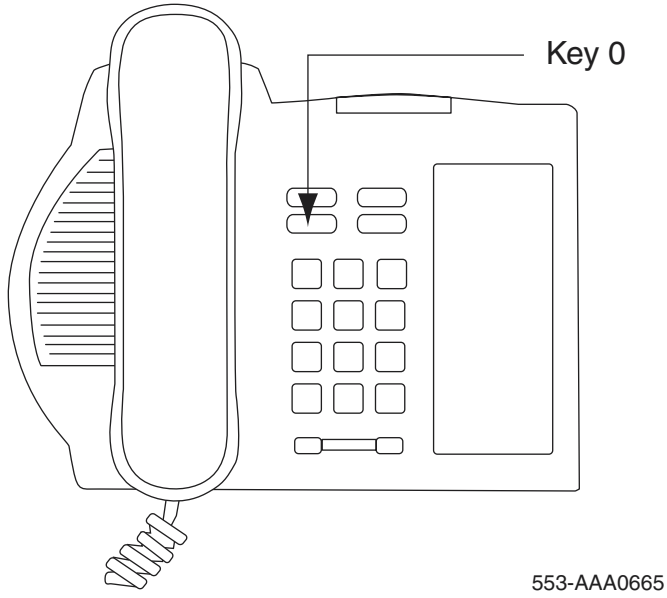

M3902 key descriptions

Table 61 gives a description of the keys on the M3902. Figure 103 on page 381 shows the physical placement of the keys on the M3902.

Table 61
M3902 key description (Part 1 of 2)

Key	Description
Key 0	You must configure Key 0 as the Directory Number line. ***Note:*** You can configure Key 0 as a Voice Call (VCC), HotLine (HOT) Key, Single Call Non-ringing, Private Line Non-ringing, Multiple Call Non-ringing, Private Line Ringing, or Multiple Call Ringing.
Key 1	Feature or Auto Dial.

Table 61
M3902 key description (Part 2 of 2)

Key	Description
Key 2	Feature or Auto Dial.
Key 3	Feature or Auto Dial.
Key 4	Call Transfer (default) or 3 Party Conference or 6 Party Conference.
Key 5	Message Waiting.
	Note: Do not configure Keys 1-5 as: • Multiple Call Non-ringing • Multiple Call Ringing • Private Line Non-ringing • Private Line Ringing • Single Call Non-ringing • Single Call Ringing

Figure 103
M3902 key positions

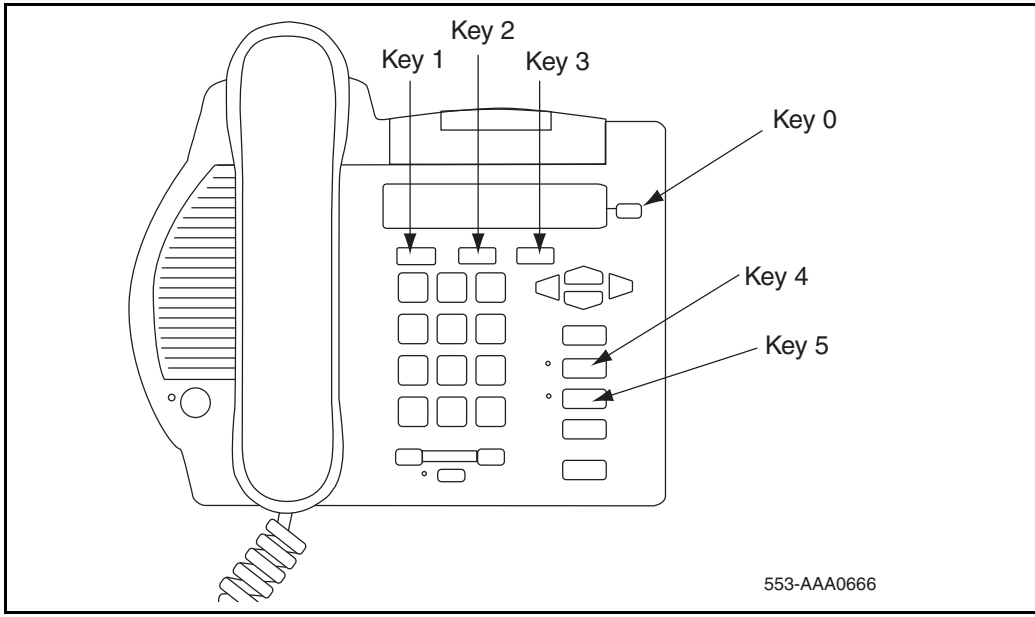

M3903 key descriptions

Table 62 gives a description of the keys on the M3903. Figure 104 shows the physical placement of the keys on the M3903.

Table 62
M3903 key description (Part 1 of 3)

Key	Description
Key 0	Primary Directory Number.
Key 1	Secondary Directory Number or Feature or Auto Dial.
Key 2	Secondary Directory Number or Feature or Auto Dial.

Table 62
M3903 key description (Part 2 of 3)

Key	Description
Key 3	Secondary Directory Number or Feature or Auto Dial. ***Note:*** Keys 1-3 cannot be configured as: • 3 Party Conference • 6 Party Conference • Call Forward • Account Charge • Calling Party Number • Call Park • Privacy Release • Ring Again • RPN • Call Transfer ***Note:*** Keys 1-3 can be configured as Speed Call (Speed Call, System Speed Call, Speed Call Controller and System Speed Call Controller). Nortel Networks recommends that Key 23 be used for Speed Call features.
Key 4-15	Not used at this time.
Key 16	Message Waiting.
Key 17	Call Transfer.
Key 18	A03 (3 Party Conference) or the A06 (6 Party Conference).
Key 19	Call Forward.
Key 20	Ring Again.
Key 21	Call Park.
Key 22	Ringing Number Pickup.

Table 62
M3903 key description (Part 3 of 3)

Key	Description
Key 23	Configure as: • Speed Call • System Speed Call • Speed Call Controller • System Speed Call Controller (manual configuration -needs speed call list #)
Key 24	Privacy Release.
Key 25	Charge Account.
Key 26	Calling Party number.
Key 27	Callers List
Key 28	Redial List
Keys 29-31	NUL.

Figure 104
M3903 key positions

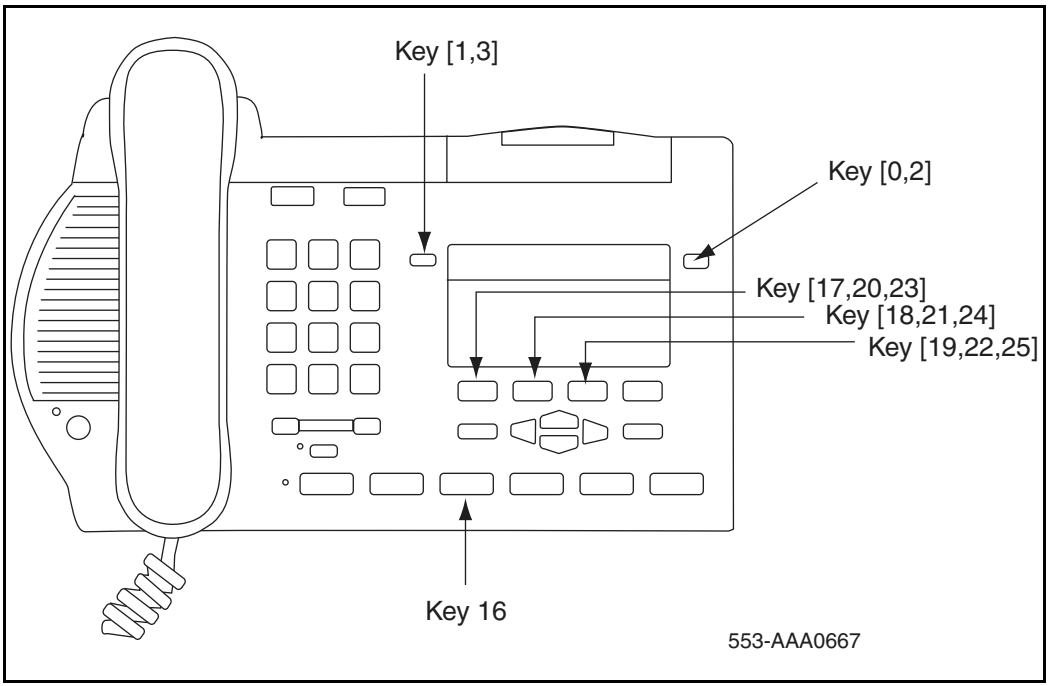

M3904 key descriptions

Table 63 gives a description of the keys on the M3904. Figure 105 on page 387 shows the physical placement of the keys on the M3904.

Table 63
M3904 key description (Part 1 of 2)

Key	Description
Key 0	Primary Directory Number.
Key 1-11	Secondary Directory Number or Feature or Auto Dial. ***Note:*** Keys 1-11 cannot be configured as: • Message Waiting • Transfer • 3 Party Conference • 6 Party Conference • Call Forward • Ring Again • Call Park • Ringing Number Pickup • Privacy Release • Charge Account • Call Party Number ***Note:*** Keys 1-11 can be configured as Speed Call (Speed Call, System Speed Call, Speed Call Controller and System Speed Call Controller). Nortel Networks recommends that Key 23 be used for Speed Call features.
Keys 12-15	Blocked.
Key 16	Message Waiting is not a default feature for this key.
Key 17	Call Transfer.
Key 18	A03 (3 Party Conference) or the A06 (6 Party Conference).

Table 63
M3904 key description (Part 2 of 2)

Key	Description
Key 19	Call Forward.
Key 20	Ring Again.
Key 21	Call Park.
Key 22	Ringing Number Pickup
Key 23	Configure as one of the following: • Speed Call • System Speed Call • Speed Call Controller • System Speed Call Controller ***Note:*** The above services are not a default feature for this key, these features can be used on any of the programmable keys.
Key 24	Privacy Release.
Key 25	Charge Account.
Key 26	Calling Party Number.
Key 27	Callers List
Key 28	Redial List
Keys 27-31	NUL.

Figure 105
M3904 key positions

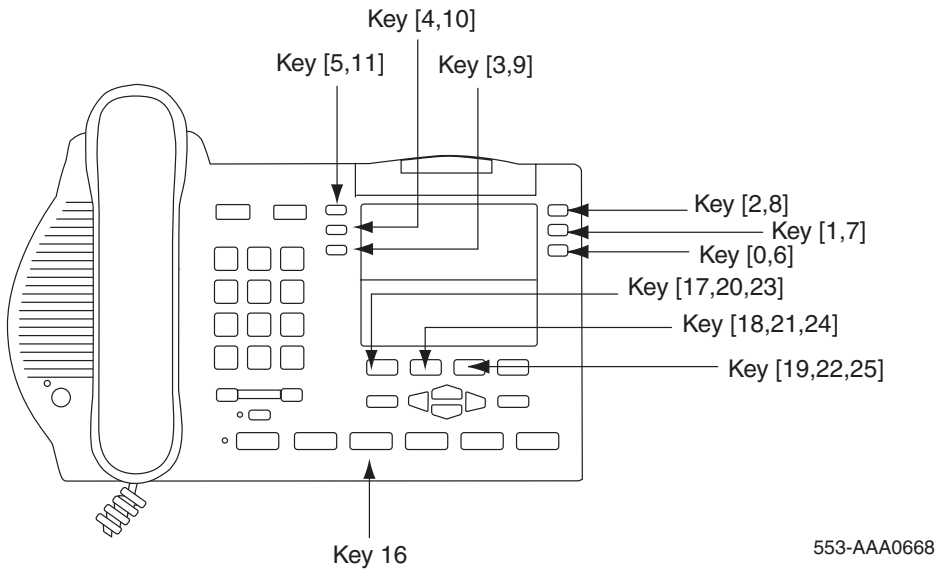

For M3904 and M3905 sets, One-Button Feature Access keys for the Callers and Redial lists cannot be programmed on a Display Based Accessory (DBA) or a Key-Based Accessory (KBA).

M3905 key descriptions

Table 64 gives a description of the keys on the M3905. Figure 106 on page 391 shows the physical placement of the keys on the M3905.

Table 64
M3905 key description (Part 1 of 3)

Key	Description
Key 0	Primary ACD Directory Number parallel to the *In-Calls Key. ***Note 1:*** The user can edit the label on Key 0 to display desired information. ***Note 2:*** The In-Calls fixed key and the Primary DN line key are linked together and both represent Key 0.
Key 1-4	Secondary Directory Number or Feature or Auto Dial. ***Note:*** Keys 1-4 cannot be configured as: • Message Waiting • Transfer • 3 Party Conference • 6 Party Conference • Call Forward • Ring Again • Call Park • Ringing Number Pickup • Privacy Release • Charge Account • Call Party Number ***Note:*** Keys 1-4 can be configured as Speed Call (Speed Call, System Speed Call, Speed Call Controller and System Speed Call Controller). Nortel Networks recommends that Key 23 be used for Speed Call features.
Key 5	Feature or future Application.

Table 64
M3905 key description (Part 2 of 3)

Key	Description
Key 6	Feature or future Application.
Key 7	Options.
Key 8-11	Configured as one of the following standard Call Center features: Key 8 = * Make Set Busy Key 9 = * Not Ready (must have CLS = AGN). Key 10 = * Emergency (must have CLS = AGN). Key 11 = * Call Supervisor (must have CLS = AGN). The following features can be configured on any Key 8-11 with the change of the prelabeled key cap: Activity Code entry.Agent Answer. Answer Emergency Call. Display Queue = DWC (used with supervisor or agent telephones). Observe agent. Ring Agent (must have CLS = SPV). ***Note:*** Keys 8-11 are prelabeled in the factory; they are marked in this table with an Asterisk.
Key 16	Message Waiting key or another feature.
Key 17	Call Transfer key.
Key 18	A03 (3 Party Conference) or the A06 (6 Party Conference).
Key 19	Call Forward.
Key 20	Ring Again.
Key 21	Call Park.
Key 22	Ringing Number Pickup.

Table 64
M3905 key description (Part 3 of 3)

Key	Description
Key 23	Configured as one of the following speed call services: • Speed Call • System Speed Call • Speed Call Controller • System Speed Call Controller
Key 24	Privacy Release.
Key 25	Charge Account.
Key 26	Calling Party Number.
Key 27	Callers List
Key 28	Redial List
Keys 29-31	NUL.

Figure 106
M3905 key positions

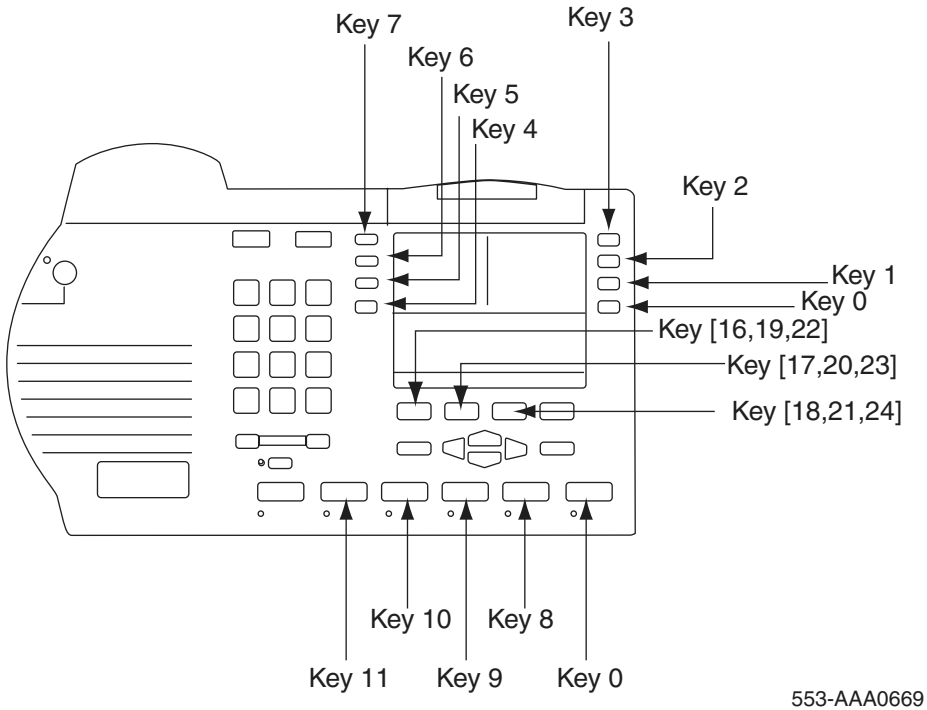

M3900 installation and configuration

Contents

This section contains information on the following topics:

Environmental and safety considerations

Temperature and humidity

Operating state:	
Temperature range	0° to 50°C (32° to 104°F)
Relative humidity	5% to 95% (noncondensing). At temperatures above 34°C (93°F) relative humidity limited to 53 mbar of water vapor pressure.

Storage:	
Temperature range	–50° to 70°C (–58° to 158°F)
Relative humidity	5% to 95% (noncondensing). At temperatures above 34°C (93°F) relative humidity limited to 53 mbar of water vapor pressure.

Safety and Electromagnetic compatibility

The M3900 Series Meridian Digital Telephones have been tested and found to comply with the following Safety and Electromagnetic Compatibility (EMC) Standards.

Safety	**Description**
EN 60950 / IEC 950	Safety of Information Technology Equipment including Electrical Business Equipment (Europe).
EN 41003	Particular Safety Requirements for Equipment to be connected to Telecommunications Network (Europe).
UL 1459	Safety Telecom (USA)
UL 1950	Safety Information Technology Equipment (USA)
CSA 22.2 225	Safety Telecom (Canada)

Safety	Description
CSA 22.2 950	Safety Information Technology Equipment (Canada)
AS3260, TS001, TA-1302	Safety (Australia)
EMKO-TSE (74-SEC) 203/92	Nordic Deviations to EN 60950
BABT	Safety (UK)
JATE	Safety (Japan)

EMC - Radiated and Conducted	Description
EN55022 / CISPR 22 Class B	Radiated Emissions Basic Standard (Europe)
FCC Part 15 Class A	Radiated Emissions (USA)
CSA C108.8	Radiated Emissions (Canada)
VCCI	EMC (Japan)
AS/NZS 3548	EMC (Australia / New Zealand)

EMC - Immunity	Description
EN50082-1	Electromagnetic Compatibility - Generic immunity standard Part 1: Residential, commercial and light industry (Europe)
IEC 801-2 (level 4)	Electro Static Discharge (Europe)
IEC 801-3 (level 2)	Radiated Immunity (Europe)
IEC 801-4 (level 3)	Fast Transient/Burst Immunity (Europe)

Headset considerations

Test the headset with the telephone before using. In a noisy environment, an amplified headset is an option. When the amplified headset is used, there are two choices of volume control: the rocker control on the telephone and the switch on the headset. The user should adjust the telephone volume before adjusting the headset volume. To provide the best communication with the least amount of distortion, the amplifier should have a higher setting than the telephone volume control.

Refer to your distributor for the latest product bulletin from Nortel Networks recommending headset types for use with the M3900 Series Digital Telephone.

Line engineering

The M3900 Series Meridian Digital Telephones use twisted pair wiring on transmission lines determined by the rules in "Digital telephones line engineering" on page 493. The maximum acceptable loop length is 1067 m. (3500 ft), assuming 24 AWG (0.5 mm) standard twisted wire with no bridge taps. A 15.5 dB loss at 256 kHz defines the loop length limit. Longer lengths are possible, depending on the wire's gauge and insulation.

CAUTION

Use only the line cord provided with the telephone. A line cord designed for another telephone can cause damage to the equipment.

M3900 set power consumption

Table 65
M3900 set power consumption

	M3901	M3902	M3903	M3904	M3905
Idle	29.3	37.3	42.5	31.5	15.02
H/F Nominal	N/A	45.7	48.7	37.5	N/A
H/F Maximum	N/A	64.3	59.7	46.4	N/A
DBA Idle	N/A	N/A	N/A	39.29	15.31
DBA H/F Nominal	N/A	N/A	N/A	45.9	N/A
DBA H/F	N/A	N/A	N/A	52	N/A
Maximum 2 KBA Idle	N/A	N/A	N/A	33.42	14.98
Note: All measurements are in milli-amps.					

Installation

Installing the M3900 Series Meridian Digital Telephones

1. Complete the wiring and cross-connections (loop power).
2. Connect the telephone to the connecting block.
3. Place the telephone upright on the desk in the normal operating position.
4. Supply the user with a quick reference guide.

CAUTION
Before handling internal telephone components, you must discharge static electricity from your hands and tools by touching any grounded metal surface or conductor.

Changing telephone positions

Your M3903, M3904 and M3905 Meridian Digital Telephones have several different height selections for the desktop positions.

To change the telephone position:

1 Press the tilt handle located at the top back side of the telephone.

2 With the tilt handle pressed in, raise or lower the telephone to the desired angle or height.

3 Release the tilt handle to lock the telephone in the desired position.

Note: The M3903 and M3904 can be wall mounted using the optional wall mount bracket.

The M3901 and M3902 Meridian Digital Telephones have three different angled height desktop positions.

To change the telephone angle:

1 Move the top of the footstand away from the telephone base (it has a snap connection).

2 Place the footstand in the desired position and snap the top of the footstand back into place.

Wall mounting the telephone

The telephone wall mount bracket kit contains a one piece wall mount plate to attach the telephone to the wall.

To wall mount the telephone:

1 Place the wall mount bracket against the wall and mark the spot to insert the screws.

Note: M3901 and M3902 have built-in wall mount brackets.

2 Screw the five screws in and leave about 3 1/2 mm (1/8 inch) between the head of the screw and the wall.

3 Remove the footstand from the telephone by sliding the footstand down (using the plastic hinges) about 7 mm (1/4 inch).

4. Swing the footstand away from the telephone base and remove from the telephone.
5. Attach the wall mount bracket onto the back of the telephone by placing the telephone at the top edge of the wall mount bracket and sliding the telephone into place.
6. Mount the wall mount bracket, attached to the telephone onto the screws located on the wall.

Installing the Accessory Connection Module (ACM)

To install the ACM:

1. Disconnect the line cord from the telephone base before installing the ACM.
2. Slide the footstand down (using the plastic hinges) about 7 mm (1/4 in.) and swing the footstand away from the telephone base.
3. Snap the ACM into the rectangular opening on the back of the telephone.
4. Connect the ACM cable to the back of the telephone.
5. Put the ACM attached ribbon cable into the track running down the back of the telephone base.
6. Put the hard plastic cable cover over the ACM ribbon cable.
7. Snap the ACM plastic cable cover into place.
8. Place the footstand on the hinges.
9. Swing the footstand back into place.
10. Snap the footstand into a non-movable position.
11. Reconnect the line cord to the telephone base.
12. Return the telephone to an upright position.

There is a cutout on the base of the footstand which displays the ACM connector ports. When ready to attach an accessory, insert the appropriate cartridge into the port slot. There is one accessory port available on the M3902. There are two accessory ports available on the M3903, M3904 and M3905.

Note 1: A wall transformer is required to power any accessory cartridges. The transformer does not come with the ACM unit. Contact your Nortel Networks local distributor to order this ACM compatible wall transformer.

Note 2: The accessories you attach to the telephone must be compatible. The table “Accessory compatibility” on page 370 shows the compatibility of the available options.

Figure 107 shows the installation of the ACM into the telephone footstand.

Figure 107
ACM module

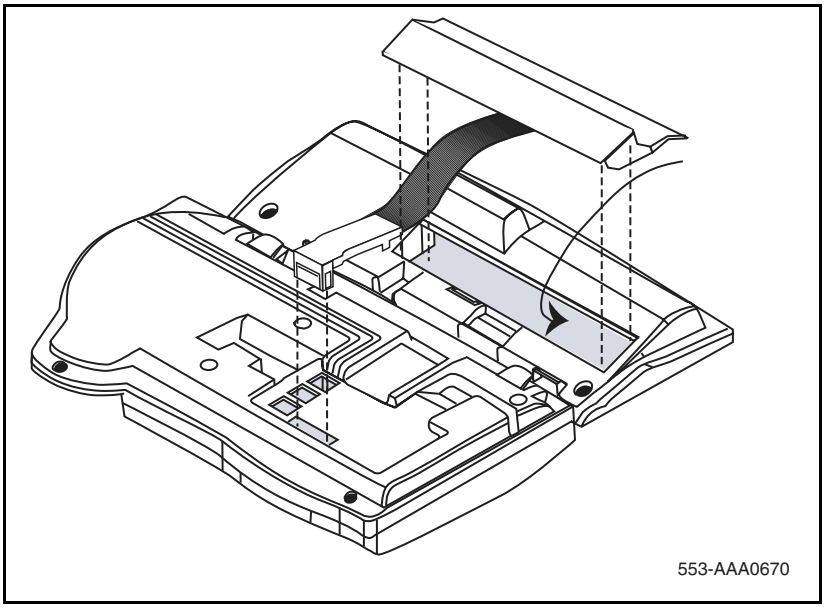

Accessory keying

On the M3903, M3904, and M3905, there are two accessory ports on the back of the telephone footstand. On the M3902, there is a single accessory port on the back of the footstand. Each port can support one cartridge accessory.

You cannot use two accessories that require the same port type at the same time. For example, you cannot use two accessories that require a serial port connection at the same time.

The shape and size of the plug in the accessory cartridge prevents the user from accidentally connecting incompatible accessories. To check the compatibility of accessories, refer to Table 58 on page 369 which shows the optional accessories and their compatibility.

Installing the Analog Terminal Adapter

The Analog Terminal Adapter (ATA) allows an off-the-shelf analog device (FAX, modem, or analog telephone (500/2500)) to work simultaneously with your M3902, M3903, M3904, or M3905 Meridian Digital Telephone. The ATA is not supported on the M3901 telephone.

Install the Accessory Connection Module (ACM) into your M3900 Series Meridian Digital Telephone. Refer to "Installing the Accessory Connection Module (ACM)" on page 399 before you install your ATA. The ACM provides connection capabilities between the M3902, M3903, M3904, and M3905 telephones and the ATA.

To install the ATA:

1. Disconnect the line cord from the telephone before installing the ATA.
2. Insert the ATA accessory cartridge into the ACM. The latch should be at the top.
3. Connect the commercial device you have selected to use, either your FAX machine, modem, or analog (500/2500) telephone, to the connection on your ATA cartridge interface.
4. Plug the transformer into the electrical outlet (use only the transformer designed for your ACM accessories).
5. Connect the Adapter plug, attached to your transformer, into the telephone wall jack.

The wall transformer Adapter plug attaches between the telephone line cord and the telephone wall jack.

6. Connect the line cord to the Adapter jack attached to the wall transformer.
7. Reconnect the line cord back to your telephone base.

Figure 108 shows the connections for the wall transformer.

Figure 108
Wall transformer connection

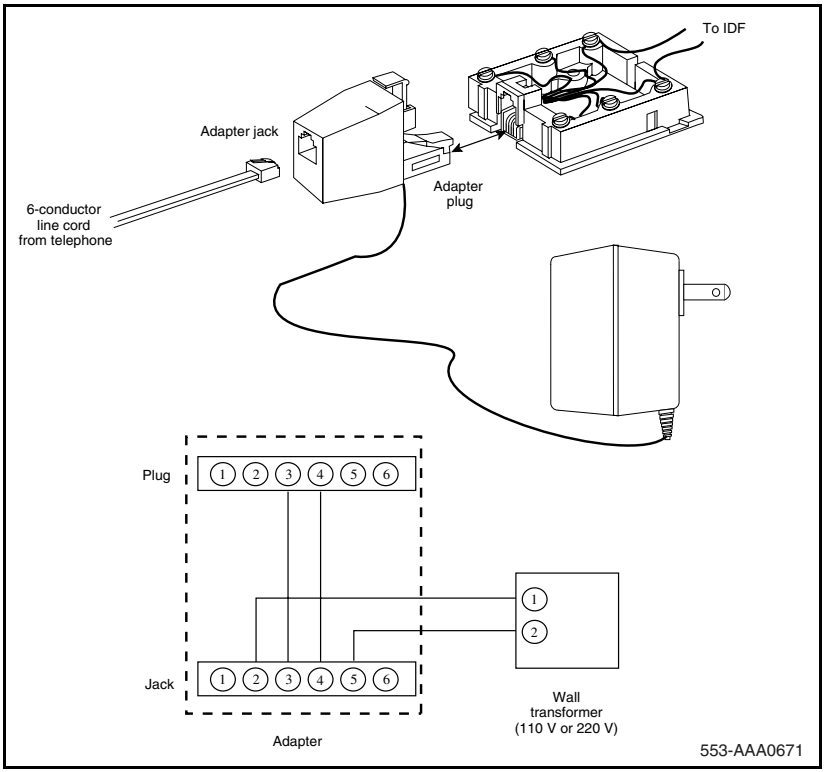

Note: Refer to the manufacturer's documentation for complete installation and configuration instructions for your external analog device (FAX machine, modem, or 500/2500 telephone).

Note: The ATA supports connections to POTS services only. ATA does not support Features such as Message Waiting, Switchhook Flash/Link, Transfer, Conference, and CLASS type services.

A red LED status light located on the ATA indicates the status of the ATA.

- **Flashing red** indicates that the ATA is operating normally. For more troubleshooting guidelines, refer to the user documentation that came with your analog device.

- **Solid red** indicates that the ATA is not operating normally. Contact your system administrator.
- **Red light off** indicates that there is no power going to the ATA or the unit is not operating correctly. Check the power connections to the ATA. If problems continue, contact your system administrator.

Flexible voice and data capabilities allow you to have continuous use of both the Meridian Digital Telephone and the attached analog device. Your system administrator configures the flexible voice and data capabilities for your telephone on the system equipment. Contact your system administrator for more information about flexible voice and data capability.

When there is a power failure to the ATA, the Analog Device does not store or keep information (for example, outgoing FAX from your FAX machine). You must send the information again when power returns.

Table 66 shows prompts and responses when configuring the ATA.

Table 66
ATA configuration

Prompt	Response	Description
REQ	NEW	Input new data
	CHG	Change current data.
CLS	aaaa	Class of Service options, where aaaa: = (FLXD) - Flexible voice/data denied = FLXA - Flexible voice/data allowed, required if ATA equipped. = (VCE) - Voice terminal, required if ATA equipped. = DTA - Data terminal. ***Note:*** If ATA is installed, CLS must be FLXA, VCE.
KEY	0 SCR xxxx	Single Call Ringing, where xxxx = the DN for ATA

Installing Personal Directory PC Utility software

The Personal Directory PC Utility provides a faster, easier way to create or modify a personal directory. You can enter names and numbers into a Personal Directory file on your Personal Computer (PC). You can download the PC file directly to the M3904 telephone. You can upload a directory from the M3904 to a PC to modify the M3904 directory.

To install the Personal Directory PC Utility Software:

1 Close all open applications before installing the Personal Directory PC Utility.

2 Insert the Personal Directory PC Utility disk into your floppy disk drive.

3 Click on Start.

4 Select Run.

5 Enter a:\setup (assuming that drive “a” is your floppy disk drive).

6 Click on OK. The Nortel Networks logo screen appears while the installation utility loads.

7 The Welcome screen appears. Click on Next to continue installation.

8 If you agree to the terms of the Software License Agreement, click on Yes.

9 Continue to Click on Next until the installation is complete.

10 When asked to, remove the disk from your floppy disk drive.

11 Click on Finish.

Note: You must restart your PC to access the Personal Directory PC Utility.

12 To select a port for the Personal Directory PC Utility; click on Phone. Click on Set port. The pull-down menu shows available PC ports:

- Com1
- Com2

Note: The program selects the same port each time until you change it.

Installing the Key-based Expansion Module Accessory

The Key-based Expansion Module Accessory (KBA) provides 22 additional line/feature keys for the M3904 and M3905 Meridian Digital Telephones. You can add up to two Key-based Expansion Modules providing a total of 75 line/feature keys.

To install the Key-based Expansion Module:

1 While depressing the telephone tilt handle, pull the telephone away from the footstand until it clears the final stop. Gently pull the footstand off the clips.

Note: If an ACM is installed, unplug the ACM and remove it from the footstand. Install the ACM in the Single KBA Footstand Assembly.

2 Place the telephone and the Module face down on a padded, level surface, and align them.

3 Plug the cable from the Module into the 10-pin connection port on the telephone. See Figure 109.

Figure 109
KBA Installation

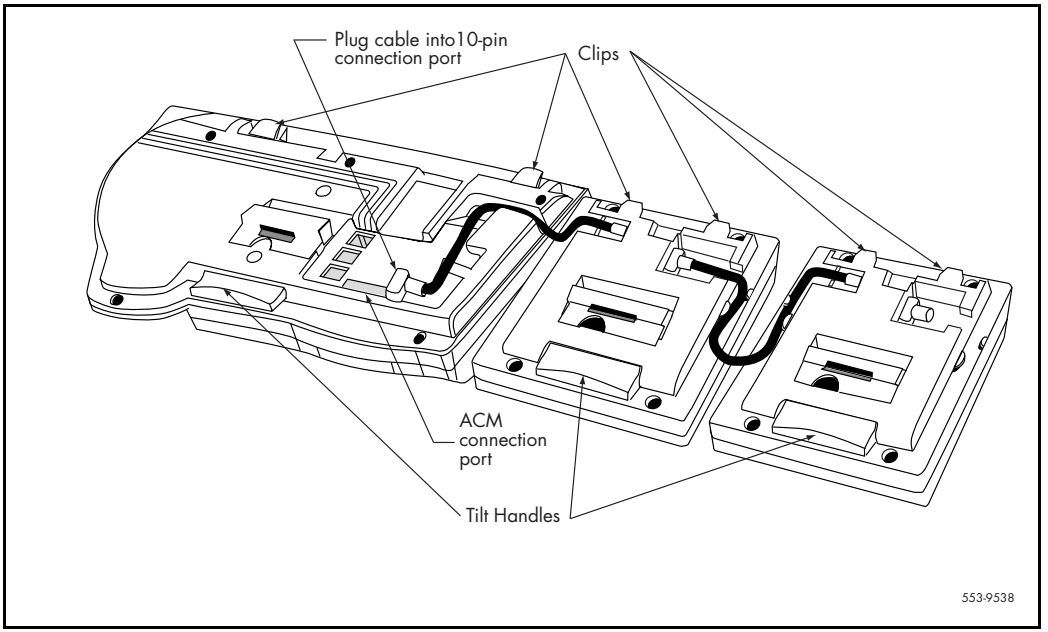

4 Thread the cable through the opening in the side of the telephone.

5 Insert the clips on the telephone into the hinges on the footstand; then press on the front of the footstand until it snaps into place.

6 Install the Single KBA Footstand Assembly. See Figure 110.

Figure 110
KBA Footstand Assembly

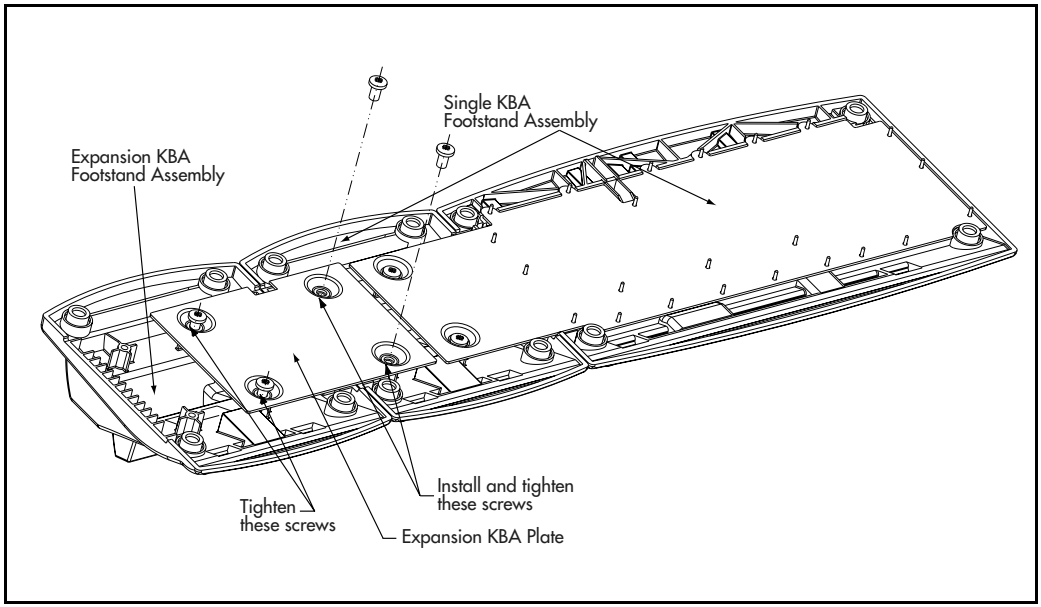

7 To add a second Key-based Expansion Module:

a. Place the telephone and the two modules face down on a non-abrasive surface.

b. Plug the cable from the second module into the 10-pin connection port on the first module.

c. Thread the cable through the routing clips on both modules.

d. Install the Expansion KBA Footstand.

Installing the Single KBA Footstand

To install the Single KBA Footstand:

1 Insert the clips on both the telephone and the Key-based Expansion Module into the hinges on the footstand assembly, and press on the front of the footstand until they snap into place.

2 While squeezing both the telephone and the Key-based Expansion Module tilt handles, swing the footstand into the desired position.

3 Turn the completed assembly upright.

Installing the Expansion KBA Footstand

To install the Expansion KBA Footstand

1 Place the Single KBA Footstand and the Expansion KBA Footstand face down on a flat surface.

2 Align the Expansion KBA Footstand with the Single KBA Footstand and slide them together.

3 Insert two screws through the Expansion KBA Plate into the Single KBA Footstand.

4 Tighten all four screws, ensuring that the two footstand assemblies are properly aligned.

5 Insert the clips on the telephone and the Key-based Expansion Modules into the hinges on the combined Single Expansion KBA Footstand Assembly, and while squeezing the Module Tilt Handles, swing the footstand into the desired position.

6 Turn the completed assembly upright.

Installing the Display-based Expansion Module

The Display-based Expansion Module gives you three layers of eight Programmable Line/Feature (soft-labeled) Keys. The Display-based Expansion Module gives you a total of 24 Programmable Line/Feature Keys (Key 32 through 55).

The Page button allows you to scroll to each key layer. The soft-labeled field is 10 characters in length. You can customize the Display-based Expansion labels using the program mode and the dial pad keys.

To install the Display-based Expansion Module:

1 While depressing the telephone tilt handle, pull the telephone away from the footstand until it clears the final stop. Gently pull the footstand off the clips.

2 Place the telephone and the Display-based Expansion Module face down on a padded level surface, and align them.

3 Lower the Module into place, and insert the 10-pin plug on the Module into the 10-pin slot on the telephone. Push in gently until the retaining tabs snap into place.

4 Insert the clips on the telephone into the hinges on the footstand, then press on the front of the footstand until it snaps into place.

5 While depressing the telephone tilt handle, swing the footstand into the desired position, then release the handle.

6 Carefully turn the new assembly upright.

Installing the handset option for the M3905 Call Center Telephone

The Handset Kit is a hardware option for the M3905 Call Center Telephone. The handset does not accompany the M3905 Call Center Telephone. The handset can be added to the M3905 by removing the front plate of the telephone.

> ***Note:*** Nortel Networks recommends that a systems administrator complete this installation.

Figure 111
Removal of the Hook Switch Cover

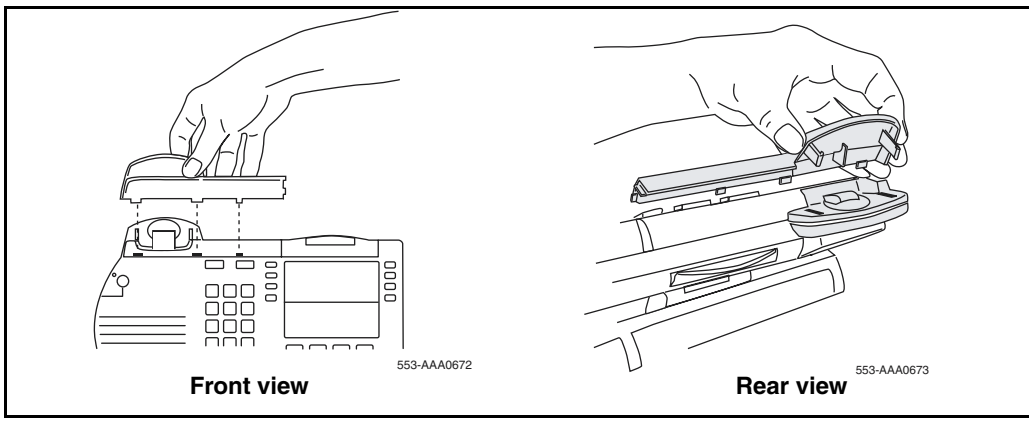

There are five tabs and two hidden snaps on the HookSwitch cover. There are two tabs along the right and three along the bottom edge (Front view). To remove the cover, the hidden snaps must be released (Rear view).

To remove the HookSwitch cover:

1 Ease the cover to the left and pull on the left side to release the left snap.

2 While holding the left snap out, ease the cover to the right and pull on the right side to release the right snap.

3 Carefully maneuver the cover out from the three bottom slots and rotate the cover to release the two side tabs.

Figure 112
Installation of the cradle

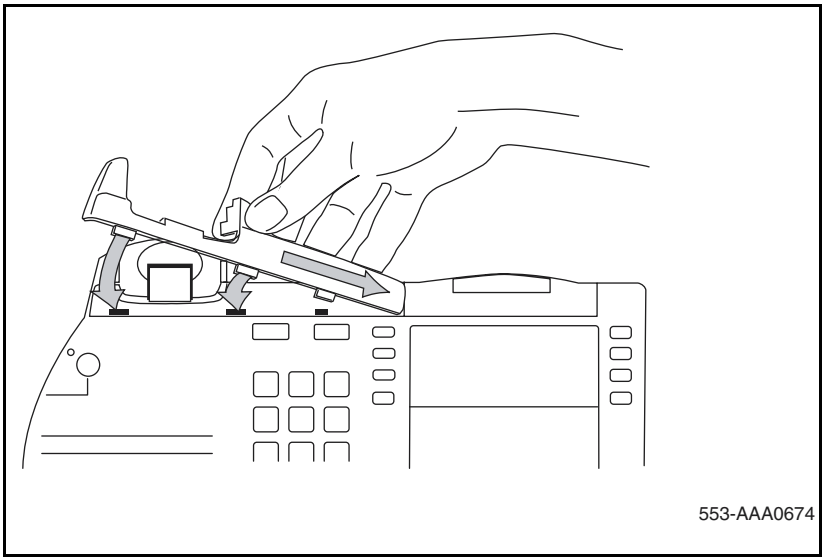

To install the cradle:

1 Hold the cradle in the same position as when you removed the Hook Switch Cover; move the cradle to the right to place the tab into the slot.

2 Ease the other tabs on the bottom edge of the cradle into the slots.

3 When all tabs are in the proper position, secure the cradle into place by pushing straight downward.

Headset options

The M3901, M3902, M3904, and M3905 supports an amplified headset when the headset connects to the handset jack.

The M3903, M3904 and M3905 have a dedicated headset jack which supports a non-amplified headset. The M3903, M3904 and M3905 have a Headset Fixed Feature Key to turn the Headset on and off.

Installing alternate key caps for the M3905

Use the Key Extractor Tool with the M3905 Call Center Telephone to remove the programmable keys and replace them with alternate keys customizing your telephone to fit your need.

Figure 113
Install the alternate key caps

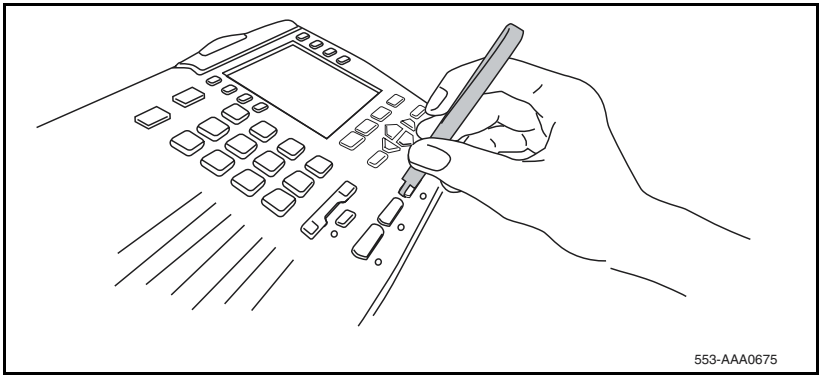

As shown in Figure 113, place the tips of the tool into the slots at the right and left of the key, grip tightly and pull straight upward.

To install the key caps:

1. Fit the two small elastomer posts into two slots on the undersides of the keys and firmly press downward.
2. The key releases immediately after pressure is applied.

   Note: If the key does not release, remove it. Attempt the installation again making sure that the posts and the slots are properly aligned.

Installing the FDHF cartridge

To install the FDHF cartridge in an M3904 Phase III set, perform the following steps:

1 Check the label on the back of your set to make sure that it is an M3904 Phase III set (NTMN34GA). If your set is an NTMN34GA, go to Step 2.

If your set is not an NTMN34GA, it is not FDHF-compatible. Please contact your system administrator to obtain the correct set.

2 Install the Accessory Connection Module (ACM). For information on how to install the ACM, refer to "Installing the Accessory Connection Module (ACM)" on page 399.

3 Insert the FDHF cartridge into one of the ACM ports.

4 Plug the wall transformer into the electrical outlet.

5 Disconnect the telephone line cord from the telephone wall jack. See Figure 114 on page 413.

6 Connect the wall transformer adapter plug into the telephone wall jack. See Figure 114 on page 413.

7 Connect the telephone line cord to the wall transformer adapter jack. See Figure 114 on page 413.

8 Verify that the FDHF cartridge is working properly.
The FDHF cartridge is working properly when the red LED on the FDHF cartridge is flashing and when there are 18 segments on the volume bar.

Figure 114
Wall transformer connection

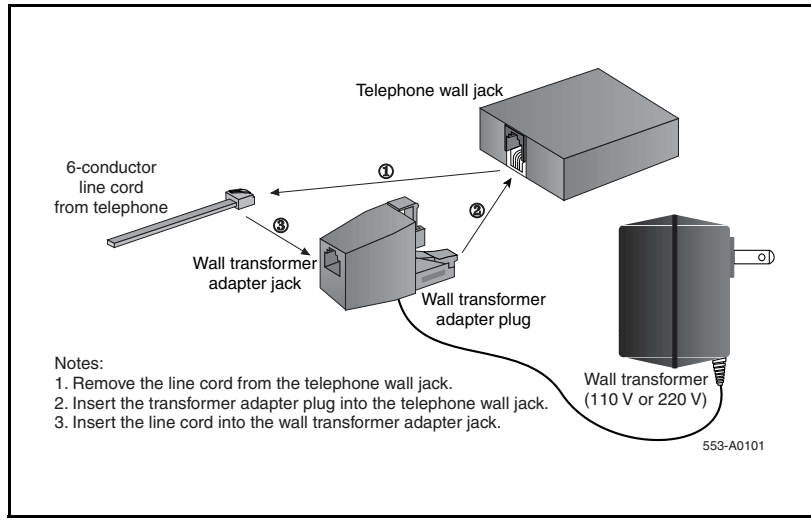

Configuration

Summary of steps

To configure the M3900 Series Meridian Digital Telephones and related features, follow the procedures in the following tables:

- "LD 11 – Configure the M3900 Series Digital Telephone," on page 415
- "LD 11 – Configure the Server-based Applications (Corporate Directory and Set-to-Set Messaging)," on page 426
- "LD 32 – Clear Personal Directory Password for M3900 set," on page 427
- "LD 57 – Configure the Flexible Feature Codes for the Virtual Office feature," on page 427
- "LD 97 – Configure a Phantom loop for the Virtual Office feature," on page 429

- "LD 20 – Print Terminal Number Block (TNB) data for Virtual and Host Terminals," on page 430
- "LD 22 – Print request for peripheral software versions," on page 430
- "LD 97 – Configure parameters for System-wide Flash Download," on page 431
- "LD 32 – Flash Download commands," on page 434

Note 1: The (...) within the table indicate additional prompts not shown.

Note 2: For more information refer to *Software Input/Output: Administration* (553-3001-311), *Software Input/Output: Maintenance* (553-3001-511), and *Software Input/Output: System Messages* (553-3001-411).

Configure the M3901, M3902, M3903, M3904 and M3905 telephone

LD 11 – Configure the M3900 Series Digital Telephone (Part 1 of 5)

Prompt	Response	Description
REQ:	NEW	New data.
	CHG	Change current data.
TYPE:	x..x	Type of telephone. 3901 = M3901. 3902 = M3902. 3903 = M3903. 3904 = M3904. 3905 = M3905. 3903H = M3903 Host Terminal. 3904H = M3904 Host Terminal. 3903V = M3903 Virtual Terminal. 3904V = M3904 Virtual Terminal. ***Note 3:*** The M3903, M3904, and 3905 telephones only support the Host Terminal and the Virtual Terminal feature. ***Note 4:*** If the M3901, M3902 or M3905 are configured as a Virtual Terminal, the error message SCH0099 is output. ***Note 5:*** M3903, M3904, and M3905 are the telephone types supported for Corporate Directory and Set-to-Set Messaging.

LD 11 – Configure the M3900 Series Digital Telephone (Part 2 of 5)

Prompt	Response	Description
TN		Terminal number.
	l s c u	For Large System, where: l = loop address. If confirmed as 3903V or 3904V, the loop must be a phantom. If confirmed as 3903H or 3904H, the loop must NOT be a phantom s = shelf address. c = card address. u = unit address.
	c u	For Small System and Succession 1000, input only the card and unit address. If confirmed as 3903V or 3904V the card must be a phantom (card slots 61-80). If the telephone has an Analog Terminal Adapter (ATA), then use the voice Terminal Numbers 16-31.
...	...	...
DES	d...d	Designator. d...d = represents an Office Data Administration System (ODAS) Station Designator of 1-6 alphanumeric characters.
...	...	...
CUST	xx	Customer number as defined in LD 15.
...	...	...

LD 11 – Configure the M3900 Series Digital Telephone (Part 3 of 5)

Prompt	Response	Description
KBA	(0)-2	Key-based Expansion Module accessory (configuration prompt KBA). The KBA prompt appears when the set type is M3904 or M3905. 0 = allows configuration of up to and including key number 31. 1 = allows configuration of up to and including key number 53. 2 = allows configuration of up to and including key number 75.
DBA	(0)-1	Display-based Expansion Module accessory (configuration prompt DBA) If KBA is a non-zero value, then DBA is not prompted. If KBA is a zero value or if the carriage return is pressed, then the DBA prompt appears. 0 = allows configuration of up to and including key number 31. 1 = allows configuration of up to and including key number 55.
FDN	xxx...x	Flexible CFNA (Call Forward No Answer) DN.
...	...	...
SCPW	xxx...x	Station Control Password.
...	...	...

LD 11 – Configure the M3900 Series Digital Telephone (Part 4 of 5)

Prompt	Response	Description
CLS	aaaa	Class of Service options where aaaa: = (GRLD) Group Listening Denied, (M3902, M3903, M3904). = GRLA Group Listening Allowed, (M3902, M3903, M3904). = (HFD) Handsfree Denied,M3902, M3903, M3904). = HFA Handsfree Allowed (M3902, M3903, M3904). = ADD Automatic Digit Display, default for M3902, M3903, M3904, M3905. = (VCE) Voice Terminal, required if ATA equipped. = DTA Data Terminal. = (FLXD) Flexible voice/data denied. = FLXA Flexible voice/data allowed, required if ATA equipped. = (STSD) Set-to-Set Messaging Denied, (M3903, M3904, and M3905). = STSA Set-to-Set messaging Allowed, (M3903,M3904, and M3905). = (CRPD) Corporate Directory Denied, (M3903, M3904, and M3905). = CRPA Corporate Directory Allowed. (M3903, M3904, and M3905). ***Note 1:*** If ATA is equipped, CLS = FLXA, VCE required. ***Note 2:*** M3903 and M3904 must have HFA class of service for the Headset to operate.
...	...	...
DCFW	z..z	Default Call Forward DN. DN where calls are forwarded (the target DN). The maximum length of the DCFW is 31.
	x <CR>	x = remove the DCFW DN. ***Note:*** The DCFW prompt appears only for Virtual Terminals (3903V, 3904V).

LD 11 – Configure the M3900 Series Digital Telephone (Part 5 of 5)

Prompt	Response	Description
KEY	xx aaa yyyy zzz	Telephone function key assignments where: xx = key number. aaa = key name or function. yyyy, zzz = additional information required. Refer to the Key description table for each M3900 telephone: “M3901 key description” on page 378. “M3902 key description” on page 379. “M3903 key description” on page 381. “M3904 key description” on page 385. “M3905 key description” on page 388. MTAD (Succession 1000M, Succession 1000, and Meridian 1 Time and Date) - The system puts a block on the time/date key on all the M3900 Series Meridian Digital Telephones. ***Note 1:*** VTN primary DN cannot be a primary DN for any other TN, and the VTN must be defined as a MARP TN. ***Note 2:*** The DN of a Virtual Terminal cannot be defined on a Host Terminal, and the Host Terminal DN cannot be defined on a Virtual Terminal.
...	...	...

Task summary list

The following is a summary of the tasks in this section:

1. LD 15 - Assign a default language and customize set-to-set messages.
2. LD 15 - Enable Virtual Office Automatic Logout and configure the automatic logout time for Virtual Office terminals.
3. LD 11 - Configure the Callers List and Redial List keys on Context-Sensitive Soft Keys or a Programmable feature keys.

4 LD 11 - Configure the default language for the M3900 set.

5 LD 11 - Allow or deny the erasing of the Callers and Redial lists for virtual terminals.

LD 15 – Assign a default language and customize set-to-set messages

Prompt	Response	Description
REQ:	NEW CHG	Add new data. Change existing data.
TYPE:	FTR	Features and options.
CUST	xx	Customer number.
...		
DFLT_LANG		M3900 default language.
	(ENG) FRE GER DUT SPA ITA NOR SWE DAN POR FIN POL CZE HUN JAP RUS	English (default) French German Dutch Spanish Italian Norwegian Swedish Danish Portuguese Finnish Polish Czech Hungarian Japanese Russian
STS_MSG	(NO) YES	Modify Set-to-Set messages.
MSG 01	<CR> <text string>	Keeps current message. Input the new message to be displayed (up to 24 characters).

LD 15 – Assign a default language and customize set-to-set messages

Prompt	Response	Description
...		
MSG 10	<CR> <text string>	Keeps current message. Input the new message to be displayed (up to 24 characters).

LD 15 – Configure the automatic logout time for Virtual Office terminals

Prompt	Response	Description
REQ:	NEW CHG	Add new data. Change existing data.
TYPE:	FTR	Features and options.
CUST	xx	Customer number.
...		
VO_ALO	(NO) YES	Disable Virtual Office Automatic Logout (default). Enable Virtual Office Automatic Logout.
VO_ALOHR	(0)-23	Virtual Office Automatic Logout time. Use the 24-hour clock.

LD 11 – Configure the Callers List and Redial List keys on Context-Sensitive Soft Keys or Programmable feature keys

Prompt	Response	Description
REQ:	NEW CHG	Add new data. Change existing data.
TYPE:		M3900 series telephone types.
	3903H 3904H 3903V 3904V 3905	M3903 Host set M3904 Host set M3903 Virtual set M3904 Virtual set M3905 set
...		
KEY	27 CLT	Configure Callers List key on a Context-Sensitive Soft Key. CLT and NUL are the only options for KEY 27.
KEY	28 RLT	Configure the Redial List key on a Context-Sensitive Soft Key. RLT and NUL are the only options for KEY 28.
KEY	XX CLT	Configure the Callers List key on an available programmable feature key.
KEY	XX RLT	Configure the Redial List key on an available programmable feature key.

LD 11 – Configure the default language for the M3900 set

Prompt	Response	Description
REQ:	NEW CHG	Add new data. Change existing data.
TYPE:		M3900 series telephone types.
	3902 3903H 3904H 3903V 3904V 3905	M3902 set M3903 Host set M3904 Host set M3903 Virtual set M3904 Virtual set M3905 set
...		

LD 11 – Configure the default language for the M3900 set

Prompt	Response	Description
MLNG		M3900 language selection. The default is the language selection chosen for the customer in LD 15. ***Note:*** The user can change the language defined at the MLNG prompt from their set.
	ENG	English
	FRE	French
	GER	German
	HEB	Hebrew
	DUT	Dutch
	SPA	Spanish
	ITA	Italian
	NOR	Norwegian
	SWE	Swedish
	DAN	Danish
	POR	Portuguese
	FIN	Finnish
	POL	Polish
	CZE	Czech
	HUN	Hungarian
	JAP	Japanese
	RUS	Russian
	LAT	Latvian
	TURK	Turkish

LD 11 – Allow or deny the erasing of the Callers and Redial lists for virtual terminals

Prompt	Response	Description
REQ:	NEW CHG	Add new data. Change existing data.
TYPE:		M3900 series telephone types.
	3903V 3904 V	M3903 Virtual set M3904 Virtual set
...		
CLS	(ELD) ELA	Erase Lists (Denied)/Allowed.

Configure Corporate Directory and Set-to-Set Messaging

LD 11 – Configure the Server-based Applications (Corporate Directory and Set-to-Set Messaging)

Prompt	Response	Description
REQ:	NEW	New data.
	CHG	Change current data.
TYPE:	3903 3904 3905	M3900 set types that support the Corporate Directory and the Set-to-Set Messaging.
...	...	...
CLS	aaaa	Class of Service options where aaaa: = ADD - Automatic Digit Display, default for M3903, M3904, and M3905. = (VCE), DTA - Voice Terminal, Data Terminal. = (FLXD) - Flexible voice/data Denied = FLXA - Flexible voice/data Allowed ***Note 1:*** Class of Service must be VCE, FLXA if telephone is equipped with the optional Analog Terminal Adapter. = (STSD) Set-to-Set Messaging Denied. = STSA, Set-to-Set Messaging Allowed. ***Note 2:*** STSD and STSA Class of Service applies to M3903, M3904, and M3905. = (CRPD), Corporate Directory Denied. = CRPA, Corporate Directory Allowed. ***Note 3:*** (CRPD) and CRPA class of service applies to M3903, M3904, and M3905.
...	...	...

Messaging

Clear or reset a Directory Password for M3900 telephone

LD 32 – Clear Personal Directory Password for M3900 set

Command	Description
CPWD l s c u	Clear Directory Password and Terminal number, where: l = loop address. s = shelf address. c = card address. u = unit address. ***Note:*** This Clear command allows the system administrator to clear the M3900 Directory password of the specified M3900 set. This allows a user to access the M3900 Directory if the password has been forgotten or if the user wants to change the current password.

Configure the Virtual Office Flexible Feature Codes

LD 57 – Configure the Flexible Feature Codes for the Virtual Office feature

Prompt	Response	Description
REQ	NEW	Add new data block information.
	CHG	Change data block information.
	OUT	Remove data block information.
	END	Exit data block.
TYPE	FFC	Flexible Feature Codes data block.
...	...	...
CODE	VTLN	FFC for logging a Virtual Terminal onto a Host Terminal.
	ALL	Every FFC is prompted.
	<CR>	No further prompt; returns to “REQ”.

LD 57 – Configure the Flexible Feature Codes for the Virtual Office feature

Prompt	Response	Description
VTLN	xxxx	Enter Virtual Terminal logging code.
	<CR>	Returns to “CODE”
CODE	VTLF	FFC type for logging off a Virtual Terminal.
	ALL	Every FFC is prompted.
	<CR>	No further prompt; returns to “REQ”.
VTLF	xxxx	Enter Virtual Terminal logging off code.
	<CR>	Returns to “CODE”.
		Note: Cannot move or copy a Virtual Terminal Number.

Print a list or count of Virtual Office telephones

LD 81 – Print a list or count of telephones with a specified class of service or feature

Prompt	Response	Description
REQ	LST	LST = Print list of telephones.
	CNT	CNT = Print count of telephones.
CUST	xx	xx = Designates a customer number.
	xx yy	xx yy = Designates a range of customer numbers.
	<CR>	<CR> = Carriage return prints all customers.
...	...	...
FEAT	aaaa	aaaa = Designates a feature mnemonic.
	3900	3900 = Prints M3900 type terminals, including virtual and host terminals.
	DCFW	DCFW = Prints default call forward phantom TNs, including virtual terminals.
...	...	...

Configure the Virtual Office Phantom loop

LD 97 – Configure a Phantom loop for the Virtual Office feature

Prompt	Response	Description
REQ	CHG	Change the loop configuration.
TYPE	SUPL	Superloops.
SUPL	Naaa	N = designates the superloop as a phantom loop.
		aaa = designates the superloop number.
...	...	...

Print data for Virtual and Host Terminals

LD 20 – Print Terminal Number Block (TNB) data for Virtual and Host Terminals

Prompt	Response	Description
REQ:	PRT	Print data block for the requested terminal type(s).
	LTN	List Terminal Numbers of the requested terminal type(s).
TYPE:	xxxxx	Enter appropriate telephone model where xxxxx:
	3903V	3903V = M3903 Virtual Terminal.
	3904V	3904V = M3904 Virtual Terminal.
	3903H	3903H = M3903 Host Terminal.
	3904H	3904H = M3904 Host Terminal.
	TNB	***Note 1:*** The only telephone types of the M3900 Series that can be configured as a Virtual or Host Terminal are the M3903 and M3904. ***Note 2:*** The Print TNB and List TNB requests always show the logged-off TNB data. In logged-in state, an indication of the logged-in TN (“HOST TN” or “VIRTUAL TN”) is added.
...	...	...

Print M3900 peripheral software versions found on the system disk

The firmware versions for each M3900 Series set type will printed along with the versions of any other downloadable peripheral software.

LD 22 – Print request for peripheral software versions

Prompt	Response	Description
REQ:	PRT	Print
TYPE:	PSWV	Peripheral software versions on disk.

Configure parameters for System-wide Flash Download

LD 97 – Configure parameters for System-wide Flash Download (Part 1 of 3)

Prompt	Response	Description
REQ	CHG	Change Flash Download Parameters.
	PRT	Print Flash Download Parameters.
TYPE	FDL	Flash Download for M3900 Sets
FDTP	t	Enter M3900 set type selected for Flash Download 3902 = M3902. 3903 = M3903. 3904 = M3904. 3905 = M3905. ALL = All of the above. NONE = None of the above (default). No further prompt; returns to “REQ”.
FDTM	(NO) YES	Time interval restriction for Flash Download NO = Do not change time intervals (default). YES = Proceed to change time intervals ***Note 1:*** Flash Download is automatically paused one hour before virtual midnight (see TODR in LD 17) to allow midnight routines to run. ***Note 2:*** This option is not applicable to reporting.
FDAY	dn	Enter day and number of time intervals for Flash Download. Prompt appears only if FDTM = YES Day is re-prompted until carriage return <CR> alone is entered. d = day of the week (0-6 for Sunday to Saturday) n = number of time intervals (0-4); to disallow download for the day, enter 0. ***Note:*** If two or more intervals are specified, they must be non-overlapping, non-consecutive, and in increasing order.

LD 97 – Configure parameters for System-wide Flash Download (Part 2 of 3)

Prompt	Response	Description
FINT	sl	Enter starting hour and length for a time interval. Prompted n times if n>0. s = starting hour (0-23) l = length of interval in hours (1-24)
FTNR	(NO) YES	TN range restriction option for Flash Download NO = no TN restriction (default) YES = specify TN range
FSTN		Starting terminal number for Flash Download. Prompt appears only if FTNR = YES.
	l s c u	Format for Large System.
	c u	Format for Small System and Succession 1000.
FETN		Ending terminal number for Flash Download. Prompt appears only if FTNR = YES.
	l s c u	Format for Large System.
	c u	Format for Small System and Succession 1000.
FDNR	(NO) YES	DN range restriction option for Flash Download NO = no DN restriction (default) YES = specify DN range
FDDN	c d1 d2	Flash Download Prime Directory Number range Prompt appears only if FDNR = YES. c = Customer number (0-99) d1 = starting Prime DN d2 = ending Prime DN

LD 97 – Configure parameters for System-wide Flash Download (Part 3 of 3)

Prompt	Response	Description
FRCE	(NO) YES	System-wide Flash Download control option NO = Conditional (default). System-wide Flash Download (via FDLS in LD 32) applies only to an M3900 series set whose flash firmware version is different from the version currently found on the system disk YES = Forced. Force System-wide Flash Download to all of the specified M3900 series sets regardless of their current flash firmware versions. ***Note 1:*** Use this option with caution! Once the download tree is built (i.e., after executing FDLS in LD 32), this option automatically reverts to NO. ***Note 2:*** This option is not applicable to reporting.
FVER	0-99	Flash firmware version specified for full report. If 0, report all versions (default). ***Note:*** This option is applicable to reporting only (via FSUM ALL in LD 32).

Configure parameters for Full Duplex Handsfree (FDHF) functionality.

LD 11 – Allow the Handsfree Class of Service

Prompt	Response	Description
REQ:	NEW CHG	Add new data. Change existing data.
TYPE:	3904	M3900 series telephone type. Full Duplex Handsfree functionality requires an M3904 Phase III set.
...		
CLS	HFA	Handsfree Allowed. HFD = Handsfree Denied (default).

Commands in LD 32 to support the Flash Download feature

LD 32 – Flash Download commands (Part 1 of 2)

Command	Description
FDLU l s c u	Initiate conditional download to one telephone. Terminal number, where: l = loop address. s = shelf address. c = card address. u = unit address.
FDLI l s c u	Initiate conditional download to an M3900 Series telephone when it becomes idle.
FDLF l s c u	initiate a forced download to an M3900 Series telephone regardless of its version and state.

LD 32 – Flash Download commands (Part 2 of 2)

Command	Description
FWVU l s c u	Query and print the firmware versions currently on an M3900 Series telephone.
FDLS	Initiate system-wide flash download to all, or a specified type of M3900 Series telephones, based on parameters specified in LD 97
FDLC	Cancel or gracefully stop the system-wide flash download for M3900 Series telephones.
FSUM	Display summary report of current firmware versions on all M3900 Series telephones. The format of the report is as follows: * * M390x SUMMARY REPORT * * dd - ON DISK ff (cc) - nnnn SETS FOUND ff (cc) - nnnn SETS FOUND Where: x = 2 to 5 for M3902 to M3905 dd = the flash firmware version found on the system disk ff = the downloadable flash firmware version found on the sets cc = the core firmware found on the sets nnnn = the number of sets found with firmware version ff (cc)
FSUM ALL	Display a complete report on all M3900 Series telephones based on parameters specified in LD 97. The format of the report is as follows: TYPE: tttt CUST: cc PDN: ddddddd TN: l s c u FW: vv Where: tttt = 3902, 3903, 3904 or 3905 cc = 0-99 ddddddd = the Primary DN of the telephone vv = the flash firmware version

M3900 Flash Download

Contents

This section contains information on the following topics:

Introduction

M3900 Flash Download provides the capability to download a new firmware version from the Succession 1000M, Succession 1000, and Meridian 1 to an M3900 telephone. Flash Download provides a way for installed M3900 telephones to be updated to the appropriate firmware release level for supporting features on the system. Flash Download can be invoked for one M3900 telephone, for a group of M3900 telephones, or all telephones on the

system. It can be invoked locally or remotely for maintenance purposes. Features of the flash download procedure include the following:

- Set type can be specified (M3902, M3903, M3904, M3905, All)
- Day(s) of week can be specified
- Up to four intervals per day can be specified (start time, length)
- TN Range can be specified (start TN, end TN)
- DN Range can be specified (start DN, end DN)
- Force Download can be specified (yes, no)

Flash download is incorporated in the existing Peripheral SoftWare Version (PSWV) background tasks of the Work Schedule. Therefore, regular call processing is impacted as little as possible. In the context of this document, PSWV represents the firmware file that is downloaded to an M3900 set. It is sometimes referred to as a Peripheral Software DownLoad (PSDL). Both PSWV and PSDL refers to an actual file that is downloaded to the M3900 set.

Flash Download requires the use of two software overlays. Use LD 97 to configure the parameters for the Flash Download capability. Use LD 32 to run the feature. Before the Flash Download feature is used, configure the feature in LD 97.

Summary of steps

See Tables 67 and 68 for the overall steps needed to perform a flash download. Table 67 is for Small Systems and Table 68 is for Large Systems. These tables list the versions of X11 software that an M3900 customer could be running and the high-level steps needed to upgrade to the latest Reissue software (25.08 Reissue or 25.15 Reissue). The tables reference “PSDL installation” on page 467 for the steps to install the M3900 language set, PSWV. The tables also reference the “Detailed Flash Download procedure” on page 448 for the step-by-step procedure for flash downloading firmware to the M3900 sets.

If you have difficulties in determining versions of X11 software, M3900 PSWV language files or firmware, refer to“Determining software, M3900 PSWV, or firmware versions” on page 447.

Table 67
Flash Download procedure matrix for Small Systems (Part 1 of 5)

Present software	Upgrade to software	Keycode required	M3900 telephones	Upgrade steps
24.24	25.08 (Re-issue)	Yes	Release 1	**1.** Call Nortel Networks technical support to find out how to receive an upgrade. • A SIM upgrade from 8 to 16 Meg is required. • An upgrade from MAT 6.5 is required. **2.** Download software from the web. **3.** Follow the “PSDL installation” on page 467. **4.** Install manufactured patches. **5.** Download firmware to sets, following the Flash Download procedure.

Table 67
Flash Download procedure matrix for Small Systems (Part 2 of 5)

Present software	Upgrade to software	Keycode required	M3900 telephones	Upgrade steps
			Release 2	***Note:*** This is not a standard process. M3900 Release 2 phones should not be configured on a Release 24.2x system. **1.** Follow the Small System Release 24.2x to Release 25.08 Reissue procedure for Release 1 telephones (above). The Release 25.08 Reissue contains M3900 Release 1 firmware. Follow the Flash Download process to downgrade the M3900 Release 2 phones to Release 1 firmware
	25.15 Re-issue	Yes	Release 1; Release 2	Follow the standard software order process.
25.08	25.08 Re-issue	No	Release 1	**1.** Download software from the web. **2.** Follow “PSDL installation” on page 467. **3.** Install manufactured patches **4.** Download firmware to sets, following the Flash Download procedure.

Table 67
Flash Download procedure matrix for Small Systems (Part 3 of 5)

Present software	Upgrade to software	Keycode required	M3900 telephones	Upgrade steps
			Release 2	***Note:*** This is not a standard process. M3900 Release 2 telephones should not be configured on a Release 25.08 system). **1.** Follow Small System 25.08 to 25.08 Reissue procedure for Release 1 telephones (above). The 25.08 Reissue contains M3900 Release 1 firmware. Following the flash download process downgrades the M3900 Release 2 telephones to Release 1 firmware.
	25.15 Re-issue	Yes	Release1; Release 2	Follow the standard software order process.

Table 67
Flash Download procedure matrix for Small Systems (Part 4 of 5)

Present software	Upgrade to software	Keycode required	M3900 telephones	Upgrade steps
	25.10 Re-issue	Yes	Release 1; Release 2	**1.** Call Nortel Networks technical support to find out how to receive an upgrade from MAT 6.5 is required. **2.** Determine M3900 PSWV to install (see Table 70 on page 461). ***Note:*** Select PSWV #5 (Release 1 firmware for X11 Release 24; second PC card is needed) only if the customer is just running the Release 24 M3900 features. **3.** Download software from the web with the appropriate PSWV language file. **4.** Follow the PSDL Installation Procedure (see "PSDL installation" on page 467) to install software with the selected M3900 PSWV file. **5.** Install the manufactured patch. **6.** Download firmware to the telephones, following the Flash Download procedure.

Table 67
Flash Download procedure matrix for Small Systems (Part 5 of 5)

Present software	Upgrade to software	Keycode required	M3900 telephones	Upgrade steps
25.15	25.15 Reissue	NO	Release 1; Release 2	**1.** Determine M3900 PSWV to install (see Table 70 on page 461). Select PSWV #1 Global or #4 N.A. (25% savings; second PC card needed). ***Note:*** Select PSWV #5 (Release 1 firmware for X11 Release 24; second PC card needed) only if the customer is just running the Release 24 M3900 features. **2.** Download software from the web with appropriate PSWV language file. **3.** Follow the PSDL Installation Procedure, see “PSDL installation” on page 467 to install software with the selected M3900 PSWV file. **4.** Install manufactured patches. **5.** Download firmware to sets, following the Flash Download procedure.

Table 68
Flash Download procedure matrix for Large Systems (Part 1 of 3)

Present software	Upgrade to software	Keycode required	M3900 telephones	Upgrade steps
24.25	25.08 Re-issue	Yes	Release 1	**1.** Call Nortel Networks technical support to find out how to receive an upgrade from MAT 6.5 is required. **2.** Follow the PSDL Installation Procedure (see "PSDL installation" on page 467). **4.** Install the manufactured patches. **5.** Download the firmware to the telephones, following the Flash Download procedure.
			Release 2	***Note:*** This is not a standard process**.** There should not be M3900 Release 2 telephones on a Release 24.2x system. **1.** Follow Large System 24.2x to 25.08 Re-issue procedure for Release 1 telephones (above). The 25.08 Re-issue contains M3900 Release 1 firmware. Following the flash download process downgrades the M3900 Release 2 telephones to Release 1 firmware.
	25.15 Re-issue	Yes	Release 1; Release 2	Follow the standard Software order process.

Table 68
Flash Download procedure matrix for Large Systems (Part 2 of 3)

25.08	25.08 Re-issue	No	Release 1	**1.** Call Nortel Networks technical support to find out how to receive an upgrade. **2.** Follow the PSDL Installation Procedure (see “PSDL installation” on page 467). **4.** Install the manufactured patches. **5.** Download the firmware to telephones, following the Flash Download procedure.
			Rel. 2	***Note:*** This is not a standard process. There should not be M3900 Release 2 phones configured on a 25.08 system). **1.** Follow the Large System 25.08 to 25.08 Re-issue procedure for Release 1 telephones (above). The 25.08 Re-issue contains M3900 Release 1 firmware;. Following the Flash Download process downgrades the M3900 Release 2 phones to Release 1 firmware.
	25.15 Re-issue	Yes	Release 1; Release 2	**1.** Follow the standard Software order process.

Table 68
Flash Download procedure matrix for Large Systems (Part 3 of 3)

25.10	25.15 Re-issue	Yes	Release 1; Release 2	**1.** Call Nortel Networks technical support to find out how to receive an upgrade. **2.** Determine the M3900 PSWV to install (see Table 70 on page 461). Select PSWV #1 Global or #4 N.A. (25% savings). ***Note:*** Select PSWV #5 (Release 1 firmware for X11 Release 24) only if customer is just running the Release 24 M3900 features **3.** Follow PSDL Installation Procedure (see Appendix A) to install software with selected M3900 PSWV file **4.** Install manufactured patches **5.** Download firmware to sets following flash download procedure
25.15	25.15 Reissue	NO	Rel. 1, Rel. 2	**1.** Determine M3900 PSWV to install (see Table 70 on page 461). Select PSWV #1 Global or #4 N.A. (25% savings). **Note:** Select PSWV #5 (Release 1 firmware for X11 Release 24) only if the customer is just running the Release 24 M3900 features. **2.** Follow the PSDL Installation Procedure (see Appendix A) to install software with selected M3900 PSWV file. **3.** Install the manufactured patches **4.** Download the firmware to sets following the Flash Download procedure.

Determining software, M3900 PSWV, or firmware versions

X11 software versions

Use the ISS command in LD 22 to identify X11 software versions. When trying to determine whether a system's software has been upgraded to the Reissue of 25.08 or 25.15, patches MPLR13167 and MPLR13247 must be loaded and the LD 22 ISS command must be issued. If "PSWV Version 32" appears for X11 Release 25.08 software, the 25.08 Reissue software has been loaded. If "PSWV Version 33" appears for X11 Release 25.15 software, the 25.15 Reissue software has been loaded.

M3900 language PSWV versions

To find the M3900 Language PSWV version on Small Systems, see related procedures in *Small System: Upgrade Procedures* (553-3011-258). The system then prints the M3900 Language PSWV file version and name, which is referenced in Table 70 on page 461.

To find the M3900 Language PSWV version on Large Systems, follow the appropriate Large System procedure in *Large System: Upgrade Procedures* (553-3021-258). When you get to the PSDL Installation menu under the Install M3900 set Language menu, select item 2 "List 3900 set languages". The system then displays the PSDL file that is currently installed on the machine, as well as other PSWV files available to install.

An alternative procedure for both large and Small Systems is to download an M3900 set on the system and query the language version for that set through the set's display diagnostics. See "M3900 firmware versions" on page 447 for information on obtaining the firmware version through display diagnostics. Once the firmware version has been obtained, it can be cross referenced to the M3900 PSWV language version in Table 70 on page 461.

M3900 firmware versions

Use the FWVU command in LD 32 to obtain the firmware version of an M3900 set. The firmware version or language version can be found through

the display diagnostics on the M3900 set. You can obtain the display diagnostics through the following procedure.

Procedure 61
Displaying the M3900 Diagnostics

1. Press the “Options” key on the M3900 set.
2. Scroll to the Display Diagnostics entry, using the up or down navigation keys.
3. Press the “Select” softkey.
4. Scroll to the screen that shows the language file and firmware version using the up or down navigation keys.

End of Procedure

For the latest firmware versions contained in the X11 software Reissue, refer to Table 70 on page 461. For information on firmware versions which fix particular M3900 problems, refer to Matrix G in the latest version of the M3900 Digital Telephone Advisory Bulletin.

The general rules for identifying which versions of firmware are Release 1 and which are Release 2 for the M3903, M3904 and M3905 sets are as follows:

- Release 1 firmware vintages are less than version 4.0 (<40 from LD 32 FWVU response).
- Release 2 firmware vintages are greater or equal to version 4.0 (>= 40 from LD 32 FWVU response).

Detailed Flash Download procedure

1. Identify sets to be downloaded. If possible, organize by Set type, TN Range, or DN Range. To determine set quantity and type, use LDs 97 and 32 to print the ranges of sets using the commands given below.
2. Establish set quantity.

3 Estimate the time required for download. Downloading sets with the North America reduced language set file takes nine minutes per set (on the M3905 it takes 12 minutes). Language sets other that the North America reduced language set file take 12 minutes to download. On Small Systems, you can download four sets in parallel. On Large Systems, you can download one set per XPEC in parallel, up to a maximum of 8 on CP4 and 31 on CPP.

The following formulas provide estimates of download times:

— Small System — North American 6 Language file:

((Quantity of M3902, 3, 4 x 9 minutes)+(quantity of M3905 x 12 minutes))/4, where 4 details the number of sets that can be downloaded in parallel.

— Small System — Global 10 Language file:

(Quantity of M3902, 3, 4, 5 x 12 minutes)/4, where 4 details the number of sets that can be downloaded in parallel

— Large System — North America 6 Language file:

((Quantity of M3902,3,4 x 9 minutes)+(quantity of M3905 x 12 minutes))/ number of XPECs (assuming even distribution of sets)

— Large System — Global 10 Language file:

((Quantity of M3902,3,4,5 x 12 minutes))/ number of XPECs (assuming even distribution of sets)

4 Based on the quantity of sets and the site situation, determine how the download will occur:

a Individual downloads (Use individual commands in LD 32)

b System download (Use system download command in LD 32)

c Scheduled download/range download (Use scheduled download commands in LD 32 and LD 97

5 Issue the appropriate download command.

6 As the download occurs, the set displays the following information:

During a flash download, the M3902, M3903, and M3905 telephones display messages on the displays at the right. (See Figure 115 on page 450) Display 1 shows the “Erasing Flash Memory” message along with blocks written to the second line (each with decreasing contrast). This is followed by Display 2 that reads “Awaiting Download.” Display 3 flashes the text “Downloading Firmware” on the first line with progress bars on the second line.

When all 24 segments of the progress bars are displayed as shown, the download is complete. The telephone then resets and returns to service. All user-controlled parameters, such as screen contrast, volume settings, and key labels are not affected by the firmware download. In the event that the firmware download was not successful, the text “Terminal Out of Service is displayed on the first line. In some cases, the set erases the flash memory, showing Display 1 followed by Display 2.

Figure 115
Information displayed during a flash download

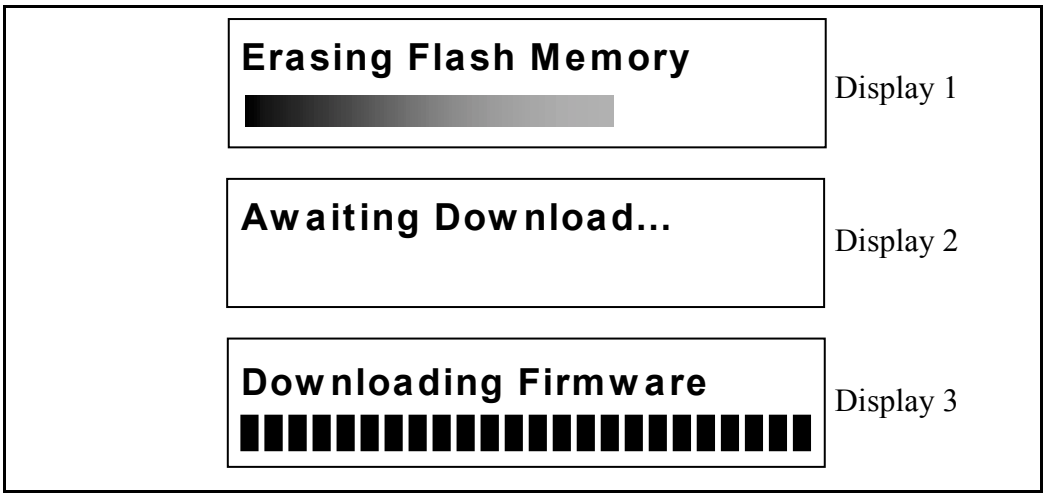

For the M3904, an hourglass icon is displayed during the flash memory erase process (see Figure 116). The erase process can take up to 15 seconds.

Figure 116
Hourglass icon

After a successful memory erase, an icon showing a stack of disks (left side of the display) and a phone icon (right side of the display) are displayed (see Figure 117). These icons remain on the display during the entire download.

Figure 117
Stack of disks and telephone icons

Upon receiving the first flash data packet, a page status bar is displayed (see Figure 118). Depending on the language files being downloaded, there are three or four memory pages that are downloaded (three for North American, four for Global, Eastern/Western European versions). As additional flash data packets are received, the status bar advances to the right until the current page is completely programmed.

Once the next page starts to download, a new page block is displayed and the status bar starts from the left again. This process is repeated for the remaining pages. If the download was unsuccessful, the set displays a telephone icon with an X through it. This indicates that the flash memory is not programmed (or is corrupt) and a new download must be initiated.

Figure 118
Status bar

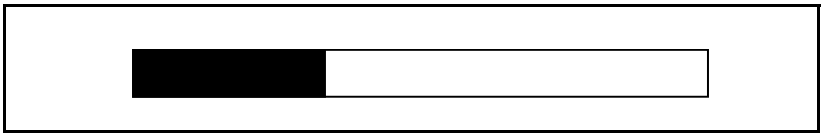

Upon completion of the flash download (all 3/4 pages have been received), the set verifies the flash memory contents before displaying the IDLE screen. The IDLE screen consists of the Date (Jan. 1 12:00am) and the brandline (Nortel Networks or customer programmed logo). Up to 25 seconds later, the switch downloads all the parameters to the set and the IDLE screen is updated according to the switch settings (for example, softkeys are shown, date is updated, and soft label keys are shown).

7 As the download occurs, various messages can appear on the system terminal. A complete list of these messages is in *System Messages* (553-3001-411). The most important message is the following:

SDL2110 e hw a v m: Failed to download software to device, where:

e (cause of the error) can be:

1 = Acknowledgment timeout error
2 = Peripheral Software (PSW) version or checksum error
3 = PSW record checksum error
4 = PSW record format error
5 = Card firmware state error

hw (card name) can be:

XNET (Network Card) XPEC (Peripheral Controller)

a (card address) can be:

Loop for Network Card Network/DTR Card
XPEC # (loop shelf) for Peripheral Controller

v is the PSW version

m can be:

FAST MODE (from initialization)
MAINT MODE (by ENLL command in LD 30)

BKGD MODE (second attempt after initialization from background program)

Hw (3902 3903 3904 3905) for M3900 flash download
e (cause of the error for M3900) can be:

1 = Time-out error
2 = PSW checksum error
3 = Record checksum error
4 = Record format error
5 = Firmware state error
6 = Invalid page number received
7 = Unrequired page delivered during download
18 = Flash memory cannot be erased (M3900)
19 = Error detected while programming flash (M3900)
20 = An application is currently active, download cannot proceed (M3900)
21 = verification byte incorrect (M3900)

Action: Try to download to the card using the appropriate enable command.

Procedure notes:

- For Symposium Call Center Server (SCCS) sites, you do not have to de-acquire sets from the SCCS (pulled out of all queues); however, the statistics might not be valid.
- To downgrade an M3900 telephone from Release 2 firmware to Release 1 firmware, or to change the language file from North American to another language file (or vice versa) use PSWV File #5 from Table 70 on page 461.
- For the downgrades procedure and language changes, refer to the appropriate upgrade procedures NTP:
  - *Large System: Upgrade Procedures* (553-3021-258)
  - *Small System: Upgrade Procedures* (553-3011-258)
  - *Succession 1000 System: Upgrade Procedures* (553-3031-258)

Configuration parameters in LD 97

The following tables show the configuration parameters that must be configured before using the Flash Download feature.

LD 97 – Configure the system-wide Flash Download parameters

Prompt	Response	Description
REQ	CHG PRT	Change Flash Download parameters. Print Flash Download parameters.
TYPE	FDL	Flash Download for M3900 sets.
FDTP	aaaa	Enter M3900 set type selected for Flash Download, where aaaa = 3902 = M3902 3903 = M3903 3904 = M3904 3905 = M3905 ALL = All of the above NONE = None of the above (default)
FDTM		Time interval restriction for Flash Download
	(NO) YES	Do not change time intervals (default). Proceed to change time intervals. ***Note 1:*** Flash Download is automatically paused one hour before virtual midnight (see TODR in LD 17) to allow midnight routines to run. ***Note 2:*** This option is not applicable to reporting.

LD 97 – Configure the system-wide Flash Download parameters

Prompt	Response	Description
FDAY	dn	Enter the day and number of time intervals for the Flash Download. The FDAY prompt appears only if FDTM = YES. Day is reprompted until you enter a <CR> d = Day of the week (0-6 for Sunday to Saturday) n = Number of time intervals (0-4) To disallow download for the day, enter 0. ***Note:*** If two or more intervals are specified, they must be non-overlapping, non-consecutive, and increasing in order.
FINT	sl	Enter starting hour and length for a time interval. Prompted n times if n>0. s = starting hour (0-23) l = length of interval in hours (1-24)
FTNR		TN range restriction option for Flash Download.
	(NO) YES	NO TN restriction (default) Specify TN range.
FSTN		Starting terminal number for Flash Download. Prompt appears only if FTNR = YES.
	l s c u	Format for Large System.
	c u	Format for Small System and Succession 1000.
FETN		Ending terminal number for Flash Download. Prompt appears only if FTNR = YES.
	l s c u	Format for Large System.
	c u	Format for Small System and Succession 1000.

LD 97 – Configure the system-wide Flash Download parameters

Prompt	Response	Description
FDNR		DN range restriction option for Flash Download.
	(NO) YES	No DN restriction (default). Specify DN range.
FDDN	c d1 d2	Flash Download Prime Directory Number range. Prompt appears only if FDNR = YES. c = Customer number (0-99) d1 = starting Prime DN d2 = ending Prime DN
FRCE		System-wide Flash Download control option
	(NO)	Conditional (default). System-wide Flash Download (through FDLS in LD 32) applies only to an M3900 series set whose flash firmware version is different from the version currently found on the system disk.
	YES	Forced System-wide Flash Download to all specified M3900 series sets regardless of their current flash firmware versions. ***Note 1:*** Use this option with caution! Once the download tree is built (i.e., after executing FDLS in LD 32), this option automatically reverts to NO. ***Note 2:*** This option is not applicable to reporting.
FVER	0-99	Flash firmware version specified for full report. If 0, report all versions (default). ***Note:*** This option is applicable to reporting only (through FSUM ALL in LD 32).

Configuration parameters in LD 32

To use the Flash Download capability, load LD 32 and issue the following commands.

Single-Set Flash Download

Flash DownLoad Unit (FDLU) - Initiate flash download for this unit. For this command to work, the set must be in an idle state. That is, there can be no active call, no active application, and the set must be configured and in working condition (responding to a query command). Also, the firmware version on the set must not be current. That is, it must be different from the one on the system disk.

. FDLU l s c u

l = loop address
s = shelf address
c = card address
u = unit address

Flash DownLoad Idle (FDLI) - Initiate flash download as soon as the set is idle. For this command to work, the set must be in working condition. If the set is idle, the downloading occurs immediately. If the set is on an active call, downloading occurs immediately after the call is terminated. However, if after the active call is terminated, there is an active application on the set, downloading is aborted. Again, the downloading operation occurs only if the version on the set is not current.

. FDLI l s c u

Flash DownLoad Forced (FDLF) - Initiate flash download immediately. For this command to work, the set must be in working condition. If the set is idle, the downloading occurs immediately. If the set is on an active call, the call is force disconnected and then downloading occurs immediately after the disconnect. It also force downloads the system disk version even if the set firmware version is more current. However, if there is an application active on the set, the downloading operation is aborted.

. FDLF l s c u

System-wide Flash Download

To prepare and trigger the flash download for the whole system manually, access LD 32 and issue the following commands.

Flash Download System (FDLS) - Initiate system-wide flash download based on the parameters specified in LD 97. This initiates the system-wide flash download to all, or the specified type of M3900 sets, from the system disk if the flash firmware version on the set is different from the version found on the disk.

During system-wide flash download, when flash download detects that an M3900 set is in an active call connection, the set is skipped. Download logic keeps track of skipped sets, and comes back to attempt the download later.

M3900 flash download attempts download to each set up to three times. If download does not succeed by the third attempt (whether due to an active call connection or some problem such as a transmission error), flash download to the set is considered to have failed. An appropriate message is displayed for each set that fails the firmware upgrade process. Upon completion of system-wide flash download, a completion message is displayed on the maintenance set. This operation can take up to several days to complete depending on the traffic load, the total number and distribution of the equipped M3900 sets, and the scheduling of the download. See Table 69 on page 459 for estimations on download times.

When M3900 sets fail system-wide flash download, you can then determine the cause of the failure, perform corrective action, and repeat the flash download command – system-wide or for a specific set.

.FDLS

Flash Download Cancel (FDLC) - Cancel the system-wide flash download. From LD 32 or outside of the overlays, you can cancel or stop the system-wide flash download operation gracefully by issuing the FDLC command. A download in progress to the current set(s) completes before the download process terminates.

.FDLC

Table 69 shows the estimated Flash Download times.

Table 69
Estimated Flash Download times

System	Average Lines	M3900 Lines	Download Time 10 languages	Faster Download 6 languages
Small System	100	80 (100%)	4 hours	3 hours
Single Group	400	200 (~60%)	20hrs. (2 XPECs) 10hrs. (4 XPECs)	15 hours 7.5 hours
Multi Group	1350	650 (~60%)	22 hrs. (6 XPECs)	16.5
MSL-100	8000	4800 (~60%)	30 hrs. (32 XPECs) 20 hrs. (48 XPECs)	22.5 hours 15 hours

The following assumptions apply to Table 69:

- 20% trunking on all systems
- 100% M3900 sets on Small Systems
- 60% M3900 sets on Large Systems
- The Faster Download is based on using the North American language files for the M3902, M3903, and M3904 (PSWV File #4 is shown in Table 70 on page 461), which are 25% smaller than the Global language files. Therefore, they take 25% less time to download. The languages that are missing from the North American reduced language file are: Swedish, Italian, Norwegian, and Finnish. The languages contained in the North America reduced language file are: English, French, German, Spanish, Brazilian Portuguese, and Japanese Katakana.

Print Firmware Versions on M3900 Sets

To determine the firmware version information on M3900 sets, use the following commands in LD 32:

Firmware Version on Unit (FWVU) - Print current firmware versions on the unit. You can query and print the firmware versions (downloadable flash firmware, as well as core firmware) currently on the specified set using this command. See Table 70 on page 461 for a list of current firmware versions.

. FWVU l s c u

Firmware version SUMmary (FSUM) - Print the firmware version summary report for all the M3900 sets. This command prints the M3900 firmware versions found on the system disk and lists every version together with a count of M3900 sets that are found to have this version.

.FSUM

The format of the report is as follows:

M390x SUMMARY REPORT
dd – ON DISK
ff (cc) – nnnn SETS FOUND
ff (cc) – nnnn SETS FOUND

Where:

x = 2 to 5 for M3902 to M3905
dd = the flash firmware version found on the system disk
ff = the downloadable flash firmware version found on the sets
cc = the core firmware found on the sets
nnnn = the number of sets found with firmware version ff (cc)

Firmware version SUMmary ALL (FSUM ALL) – Displays a complete report on all M3900 Series telephones based on the parameters in LD 97.

.FSUM ALL

The format of the report is as follows:

TYPE: ttt CUST: cc PDN: ddddddd TN: l s c u FW: vv

Where:

tttt = 3902, 3903, 3904, 3905
cc = 0-99
ddddddd = the Primary DN of the telephone
vv = the flash firmware version

Query Disk Firmware Versions

To determine the firmware version residing on the system disk(s) available for download to the M3900 sets, use the PSWV command in LD 22 to print the firmware versions for M3900 sets. See Table 70 on page 461 for a list of current firmware versions.

. PSWV

Table 70
Firmware and PSWV versions (Part 1 of 3)

PEC codes	**PSWV codes**				**F/W codes**	
1	2	3	4	5	6	7
M3900 SET (## = 66, 70) XX = See Note 1	PSWV File	PSWV Region	M1 F/W file (PSWV) See Note 2	LD 22 Response for PSWV See Note 3	Set F/W Diagnostic See Note 4	LD 32 FWVU Response for set F/W See Note 5
M3902						
NTMN32 XX-##	PSWV File #1	Global (10 lang.)	3902.loadaa 40	M3902: S/W VERSION NUMBERS: 40	Lang: L1.9 F/W Ver: 4.0	FLASH FIRMWARE VERSION = 040

Table 70
Firmware and PSWV versions (Part 2 of 3)

PEC codes	PSWV codes				F/W codes	
1	2	3	4	5	6	7
	PSWV File #4	N. America (6 lang.)	3902.loadda 40	M3902: S/W VERSION NUMBERS: 40	Lang: L4.9 F/W Ver: 4.0	FLASH FIRMWARE VERSION = 040
M3903						
NTMN33 XX-##	PSWV File #1	Global R2: (10 lang.)	3903.loadaa 51	M3903: S/W VERSION NUMBERS: 51	Lang: L1.9 F/W Ver 5.1	FLASH FIRMWARE VERSION = 051
	PSWV File #4	N. America R2 (6 lang.)	3903.loadda 51	M3903: S/W VERSION NUMBERS: 51	Lang: L4.9 F/W Ver 5.1	FLASH FIRMWARE VERSION = 051
NTMN33 XX-##	PSWV File #5	Rel. 1 for X11 Rel 24	3903.loadaa 36	M3903: S/W VERSION NUMBERS: 36	Lang: P1.9 F/W Ver 3.6	FLASH FIRMWARE VERSION = 036
M3904						
NTMN34 XX-##	PSWV File #1	Global R2: (10 lang.)	3904.loadaa 46	M3904: S/W VERSION NUMBERS: 46	Flash: 4.6 P0 L1.8	FLASH FIRMWARE VERSION = 046
	PSWV File #4	N. America R2 (6 lang.)	3904.loadda 46	M3904: S/W VERSION NUMBERS: 46	Flash: 4.6 P0 L4.8	FLASH FIRMWARE VERSION = 046
NTMN34 XX-##	PSWV File #5	Rel. 1 for X11 Rel 24	3904.loadaa 34	M3904: S/W VERSION NUMBERS: 34	Flash: 3.4 P0 L1.8	FLASH FIRMWARE VERSION = 034

Table 70
Firmware and PSWV versions (Part 3 of 3)

PEC codes	PSWV codes				F/W codes	
1	2	3	4	5	6	7
M3905						
NTMN35 XX-##	PSWV File #1	Global (10 lang.)	3905.loadaa 32	M3905: S/W VERSION NUMBERS: 32	Lang: L1.9 F/W Ver 3.2	FLASH FIRMWARE VERSION = 032
	PSWV File #4	N. America (10 lang.)	3905.loadaa 32	M3905: S/W VERSION NUMBERS: 32	Lang: L1.9 F/W Ver 3.2	FLASH FIRMWARE VERSION = 032

The following notes apply to Table 70.

Note 1: For Column 1 labeled *M3900 Set*, XX is a two-letter alpha character that is part of the product code. For instance, a product code of NTMN32AB is a later issue than a code of NTMN32AA. Release 1 M3900 sets all started with a “BA” designation for U.S. and Canada sets, and “AA” for Canada only icon sets. Release 2 M3900 sets all started with a “FA” designation for U.S. and Canada sets and “EA” for Canada only icon sets.

Note 2: For Column 4 labeled *M1 F/W File*, the two-letter alpha character followed by two numbers (format: 390x.loadXX##) shows the release level of the PSWV file. For instance, M3902.loadaa40 is a later issue than M3902.loadaa36. The most up-to-date file names are shown.

Note 3: For Column 5 labeled LD 22 *Response for PSWV*, the two number code is the firmware version release level. The larger the number, the newer the version. The last two digits correspond to the same version number as the M3900 firmware version. For instance, M3903: S/W VERSION NUMBERS: 51 is equivalent to M3900 F/W Version 5.1. The most current versions are shown.

Note 4: Column 6, labeled *Set F/W Diagnostic*, shows the language file in use and the firmware level of the set, as seen on an M3900 display. The larger the number, the newer the version. The latest versions are shown. To view the firmware level of an M3900 set, press the Options key, scroll to the Display Diagnostics entry, and press Select. Use the Down Navigation key to get to the screen that shows the language file and firmware version.

Note 5: For Column 7 labeled *LD 32 FWVU Response for set F/W*, the three-digit number shows the firmware version of the set. The larger the number, the newer the version. For example, a number of 040, refers to a firmware version of 4.0. The latest versions are shown.

Flash Download advisements

Since the Flash Downloading feature of the M3900 takes some bandwidth from the system signaling path while it is operating, it is recommended that downloading be scheduled in off-peak hours for best results. There is some real time impact to the system since the system processor is busy doing the downloads. However, there is no impact to call processing, since call processing has a higher priority. Therefore, downloads take longer during peak traffic times because the system processor is busy doing call processing and cannot devote as much time to the M3900 downloads. There is no difference between Large Systems and Small Systems for this.

When a system is first brought into service with M3900 sets, there is a significant amount of messaging that occurs to activate the sets through the Lamp Audit background routine. The time required to bring all sets into service on a system is dependent on the system configuration, and could take several hours. Performing a Flash Download directly after the system is brought into service adds to the message load on the system. Therefore, it is recommended that M3900 set download activities not occur in conjunction with systems being brought into service. Instead downloads should occur 24 hours after a system is brought into service.

If a user attempts to use a set during a flash download, all set activity is ignored.

When performing a flash download to an M3900 port that does not have a set installed, or downloading to an M3900 port that has the wrong M3900 set type installed, an SDL2110 error message is printed out at the system.

During the middle of flash download operation, if the set is disconnected or if the set fails download for any reason, the set is rendered inoperable. Flash downloading must run to completion before the set can be made operable.

For the manual individual download operation, if the set is not responding (is not operational) or if the set is not a M3900 set, flash download fails.

If the firmware file(s) used as the source for flash download to M3900 sets are not present (in the proper location) on the system disks, the flash download operation fails.

While a system-wide flash download operation is in progress, attempts to disable sets that are currently being downloaded result in an SCH1958 message that is printed with the list of sets involved. If a loop, shelf, or card that contains the sets being downloaded is disabled, then the download to the sets on that loop, shelf, or card fails.

According to the existing PSWV logic, when PSWV is in progress, an attempt to load an overlay is denied and result in an OVL0306 message.

Nortel Networks strongly recommends that you not force load an overlay (load with a Suspend option) unless there is an emergency while PSWV is in progress. In this instance, existing PSWV logic aborts downloading for the current PSWV block (of cards or sets of a given type being downloaded) and restarts the download for that block and remaining ones after the overlay is exited. If this happens to M3900 flash download, the block of sets are out-of-service for a lengthy period of time and this prolongs the completion of the system-wide flash download.

If system warm-start (Initialization) or cold-start (Sysload) occurs while flash download is in progress, the download process is aborted abruptly. Any sets which are in the middle of download fail to complete firmware download and are left inoperable. You must re-enter the single-set or system-wide flash download command later to restart and complete the download. For system-wide downloads, any previously scheduled sets are no longer queued for download.

While a manual individual download operation is still in progress, do not abort LD 32 (except in an emergency) by using the **** command. If the overlay is aborted before completing the download, the set is left inoperable until a flash download command for the set is re-entered and completed at a later time.

During system wide download, you can use all overlays by issuing the ld x susp command. However, this ungracefully stops the download to the current group of sets that are being downloaded and leaves them without firmware until the overlay is exited. The download to these sets is then started again.

While a system-wide flash download operation is in progress:

- Service change (CHG, MOV, or OUT) to a unit that is currently being downloaded is blocked in LD 11. An SCH1958 message is printed.
- Move (MOV) or remove (OUT through LD 11 or Automatic Set Relocation) to an M3900 set before its flash download starts prevents download to the set in this cycle of system-wide flash download.
- A new M3900 set added (through LD 11 or Automatic Set Relocation) after the FDLS command is issued is not included in this round of system-side download.

When scheduling the Flash Download of sets, note that one hour before the Midnight routines execute, the flash download process is gracefully stopped. The Flash downloading resumes once midnight routines are executed.

When a schedule is defined in LD 97 and the Flash Download is started (by entering the FDLS command in LD 32), all scheduled sets are queued for download. The download process remains active in the background until the download is complete or is canceled (using the FDLC command in LD 32). If the download is active in the background (sets not actively downloading per the scheduled download time) and the download schedule is removed in LD 97, the download begins immediately for the sets that remain in the download queue. Use the LD x SUSP command to load an overlay when the download is active in the background (scheduled but not actively downloading sets). It is also not possible to perform a single set download (FDLU, FDLI, or FDLF command from LD 32) while the download is active in the background. If an individual download is attempted in this case, the

system indicates that the PSDL is not idle. If an individual set download is necessary while the download is active in the background, you must cancel the download in LD 32 using the FDLC command. Once the individual downloads are complete, you can restart the schedule download with the FLDS command in LD 32.

> ***Note:*** If the force option is used with the FDLS command, all sets in the original schedule are downloaded.

For M3900 sets actively being flash downloaded when the Flash Download Cancel FDLC command is issued, the flash download to these sets is completed before the flash download process cancels.

M3905 sets acquired by the Symposium Call Center Server (SCCS) do not have to be de-acquired (pulled out of all queues) before the flash download is started. However, during the download, the agent using the M3905 set is placed in a maintenance-busy state for approximately 12 minutes. As a result, the SCCS is not able to record any agent statistics for agents using the M3905 sets during the download. The SCCS agent reports for the interval in which the download occurred will, therefore, be inaccurate.

PSDL installation

During a flash download, the system downloads the contents of a PSDL/PSWV file to an M3900 set. This PSDL Installation Procedure can be used to load a new PSDL/PSWV file on the system in place of totally reinstalling system software. If there are concerns about system downtime in regards to performing software upgrades in cases where only a new PSDL/PSWV file is needed, this process allows the replacement of the PSDL/PSWV file only. For detailed information on the PSDL installation procedure, refer to *Succession 1000 System: Upgrade Procedures* (553-3031-258).

Commands for system-wide Flash Download of M3900 sets

LD 97 – Configure parameters for System-wide Flash Download.

Prompt	Response	Description
REQ	CHG PRT	Change Flash Download parameters. Print Flash Download parameters.
TYPE	FDL	Flash Download for M3900 sets.
FDTP		Enter M3900 set type selected for Flash Download.
	3902 3903 3904 3905 ALL (NONE)	M3902 telephone M3903 telephone M3904 telephone M3905 telephone All of the above None of the above (default)
FDTM		Time interval restriction for Flash Download.
	(NO) YES	Do not change time intervals (default). Proceed to change time intervals. ***Note 1:*** Flash Download is automatically paused one hour before virtual midnight (see TODR in LD 17) to allow midnight routines to run. ***Note 2:*** This option is not applicable to reporting.

LD 97 – Configure parameters for System-wide Flash Download.

Prompt	Response	Description
FDAY		Enter day and number of time intervals for Flash Download, where:
	d n	d = day of the week (0-6 for Sunday to Saturday) n = number of time intervals (0-4)
		To disallow download for the day, enter 0.
		Day is re-prompted until you enter a Carriage Return, <CR>.
		Note 1: This prompt appears only if FDTM = YES.
		Note 2: If two or more intervals are specified, they must be overlapping, non-consecutive, and in order.
FINT		Enter starting hour and length for a time interval, where:
	s l	s = starting hour (0-23) l = length of interval in hours (1-24)
		Note: FINT is prompted *n* time if *n* is greater than 0.
FTNR		TN range restriction option for Flash Download.
	(NO)	No TN restriction (default)
	YES	Specify TN range.
FSTN		Starting terminal number for Flash Download.
		Note: The FSTN prompt appears only if FTNR = YES.
	l s c u	Format for Large System.
	c u	Format for Small System and Succession 1000.
FETN		Ending terminal number for Flash Download.
		Note: The FETN prompt appears only if FTNR = YES.
	l s c u	Format for Large System.
	c u	Format for Small System and Succession 1000.

LD 97 – Configure parameters for System-wide Flash Download.

Prompt	Response	Description
FDNR		DN range restriction option for Flash Download.
	(NO) YES	No DN restriction (default). Specify DN range.
FDDN		Flash Download Prime Directory Number range, where:
	c d1 d2	c = Customer number (0-99) d1 = starting Prime DN d2 = ending Prime DN ***Note:*** Prompt appears only id FDNR = YES.
FRCE		System-wide Flash Download control option.
	(NO)	Conditional (default). System-wide Flash Download (using the FDLS command in LD 32) applies only to an M3900 series set whose flash firmware version is different is different from the version currently found on the system disk.
	YES	Forced. Force System-wide Flash Download to all of the specified M3900 series sets regardless of their current flash firmware versions. ***Note 1:*** Use this option with caution. Once the download tree is built (that is, after executing FDLS in LD 32), this option automatically reverts to NO. ***Note 2:*** This option is not applicable to reporting.
FVER	0-99	Flash firmware version specified for full report, where: If 0, report all versions (default). ***Note:*** This option is applicable to reporting only (through the FSUM ALL command in LD 32).

LD 32 – Flash Download commands

Command	Description
FDLU l s c u	Initiate conditional download to one telephone. Terminal number, where: l = loop address s = shelf address c = card address u = unit address
FDLI l s c u	Initiate conditional download to an M3900 Series telephone when it becomes idle.
FDLF l s c u	Initiate a forced download to an M3900 Series telephone regardless of its version and state.
FWVU l s c u	Query and print the firmware versions currently on an M3900 Series telephone.
FDLS	Initiate system-wide Flash Download to all, or a specified type of M3900 Series telephones, based on parameters specified in LD 97.
FDLC	Cancel or gracefully stop the system-wide flash download for M3900 Series telephones.

LD 32 – Flash Download commands

Command	Description
FSUM	Display the summary report of current firmware versions on all M3900 Series telephones. The format of the report is as follows: * * M390x SUMMARY REPORT * * dd - ON DISK ff (cc) - nnnn SETS FOUND ff (cc) - nnnn SETS FOUND Where: x = 2 to 5 for M3902 to M3905 dd = the flash firmware version found on the system disk ff = the downloadable flash firmware version found on the sets cc = the core firmware found on the sets nnnn = the number of sets found with firmware version ff (cc)
FSUM ALL	Display a complete report on all M3900 series telephones based on parameters specified in LD 97. The format of the report is as follows: TYPE: tttt CUST: cc PDN: ddddddd TN: l s c u FW: vv Where: tttt = 3902, 3903, 3904 or 3905 cc = 0-99 ddddddd = the Primary DN of the telephone vv = the flash firmware version

M5317 BRI terminal

Contents

This section contains information on the following topics:

Introduction

The M5317TX and M5317TDX BRI Terminals are for use in North America. The CustomNet ISDN Handset is the same telephone without NI-1 Signaling or voice operation, and is for use in Australia.

M5317TDX telephones and CustomNet ISDN Handsets are connected to the ISDN BRI (Basic Rate Interface) Service at the “S” (or “T”) interface. The M5317TX and M5317TDX are identical except the M5317TDX has the Data Option installed on it.

Meridian Feature Transparency (MFT), National ISDN-1 Signaling (NI-1), and Meridian 1 (Mer1) protocols are supported for voice. Circuit-switched data is only supported in NI-1 Signaling.

A-law or μ-law Pulse Code Modulation (PCM) voice capability is supported on either the B1 or the B2 channel.

Circuit-switched data calls are supported using T-link or V.120 protocol, and packet-switched data calls are supported using X.25 (D-channel) protocol.

Physical description

Dimensions

The M5317T telephones have these dimensions:

length	226.5 mm (9 in.)
width	272.0 mm (10.7 in.)
height (front)	27.5 mm (1.1 in.)
height (rear)	73.5 mm (2.9 in.)

Weight

Excluding the handset, cords, and any packaging, the M5317TX or the M5317TDX weigh approximately 1000 grams (2.2 lbs).

Environmental considerations

Temperature

in operation	in storage
0° to 50°C (32° to 122°F)	-20° to 66°C (-4° to 150°F)

Humidity

in operation	in storage
5% to 95% non-condensing, from 0° to 29°C (32° to 84°F)	-20° to 66°C (-4° to 150°F)
Equivalent to 34% at 50°C (122°F) non-condensing from 30°C to 50°C (86°F to 122°F)	Equivalent to 15% at 66°C (150°F) non-condensing from 29° to 66°C (84° to 150°F)

Electromagnetic emissions

The M5317T telephones are specified to comply with the limits for Class A, Subpart J of the Federal Communications Commission (FCC), Part 15 and Class B, CSA C108.8, CISPR22 Class B (AS 3548).

Atmospheric pollution

Each M5317T telephone is designed to withstand normal atmospheric conditions throughout its life and during shipment. It meets exposure tests for salt, mist, atmospheric dust, sulfur dioxide and hydrogen sulfide as defined in IEC document 50.

Terminal powering

Line engineering

The telephones will operate to their full potential through twisted pair wiring.

Powering alternatives

The telephones are powered through the RJ connectors and the line cord. They may be powered from one of the following sources:

- PS1, phantom power conducted over the “T” line card or the NT1
- PS2, auxiliary DC power conducted over a third pair in the line cord (may be provided independently of the NT1 or line card)
- Local DC power conducted over a third pair from a power pack (connected by means of an RJ-45 plug connector with the DC power terminated on its pin 7 (PS2-) and pin 8 (PS2+) inserted into one of the wall-mounted RJ sockets.

A dip switch (switch A), accessible through a small hatch in the base of the telephone housing, must be set to select between the phantom powering (PS1) or powering provided by a third pair (PS2 or local AC).

Restricted powering

A second dip switch (switch B), in the same location and accessible through the same access hatch as switch A must be set to determine whether the telephone accepts restricted powering from PS1 or PS2. As a rule, only one telephone on a loop is designated for restricted powering and is named the “designated” telephone. When an NT1 or line card reverses the polarity of the PS1 or PS2 power output while operating from backup batteries, only a “designated telephone” continues to operate.

Power consumption

The normal standby mode power consumption indicated below depends on deactivating the S/T-loop (not currently supported).

Operating Mode	M5317TX	M5317TDX
Normal active	1.2.2W	1.5W
Normal standby	200mW	250mW

Voltage range

The following are the operating limits when attached to an S/T-loop:

24 V - Minimum DC input voltage at the line cord when the loop is full loaded (PS2)

56.5 V - Maximum DC input voltage at the line cord when the loop is not loaded (PS2)

Local power supply requirements

The following values apply to sealed plug-in AC transformers with rectified DC output, used for local power supply from a wall-outlet directly at the working location of the telephone.

Australia

Minimum AC voltage at outlet: 200 V rms
Maximum AC voltage at outlet: 280 V rms

Average maximum AC current required: 50 mA
AC supply frequency: 50 Hz
Minimum transformer output voltage: 24 V DC
Maximum transformer output voltage: 34 V DC

North America

Minimum AC voltage at outlet: 97 V rms
Maximum AC voltage at outlet: 132 V rms
Average maximum AC current required: 100 mA
AC supply frequency: 60 Hz
Minimum transformer output voltage: 24 V DC
Maximum transformer output voltage: 34 V DC

Features

Display

The 155 x 15 mm (6 x 0.6 in.) alphanumeric LCD assembly has a display capacity of two 40-character lines. In NI-1 and Meridian 1 modes, the first line usually displays date and time (during the idle state only), incoming call identification, connection information, feature icons, user prompts, and messages.

Figure 119
Display icons (enlarged view)

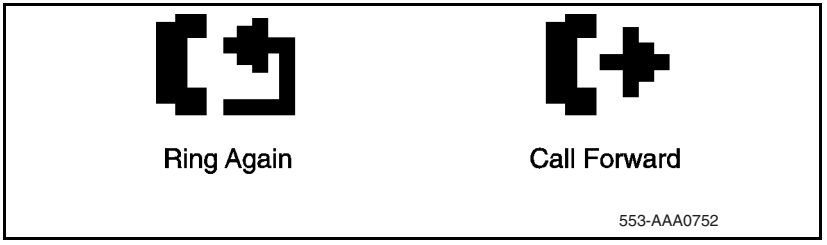

The second line displays the context-dependent softkey functions (8 characters per key, including spaces) in accordance with the state of the terminal, whenever applicable. If there are more than five choices available, a more... softkey is shown. The softkey labels always give the currently valid

commands and features. Pressing that softkey displays additional labels available for the accessed telephony state.

If MFT mode is used, both lines of the LCD may be used for call information.

Displays are defined by the switch software, and may vary between software loads. In BCS34, the idle display is blank, and at other times call progress information is displayed on both lines.

Softkeys

In NI-1 mode, the softkey labels display functions only for local and network features that have been datafilled. The available functions may vary from telephone to telephone and, consequently, a softkey label may be displayed in different locations at different times on different sets. Refer to the User guides for examples and detailed explanations of the functioning of the various softkey features.

In NI-1 mode, the following features are supported on softkeys:

- Call Forward
- Call Park
- Call Pickup (group)
- Executive Busy Override
- Make Set Busy
- Privacy Release/Privacy
- Ring Again/Call Back Queuing
- Three-Way Call (Flexible Calling)
- Call Transfer

In Meridian 1 mode, this feature is supported on softkeys:

- Calling Line ID Presentation/Calling Line ID Restriction

Designated function keys

There are 15 designated function keys, each with a fixed function assigned. They consist of:

- 12 dial pad keys
- 1 Release (Rls) key
- 1 Hold key
- 1 Volume Control key (with 2 toggle positions and center press function)

The assignment of these keys is different depending on whether MFT, Meridian 1, or NI-1 is used.

Programmable function keys

Keys 2 to 11 for NI-1 and Meridian 1, and keys 2 to 10 for MFT, may be assigned varying functions depending on the network datafill.

Figure 120
Key layout

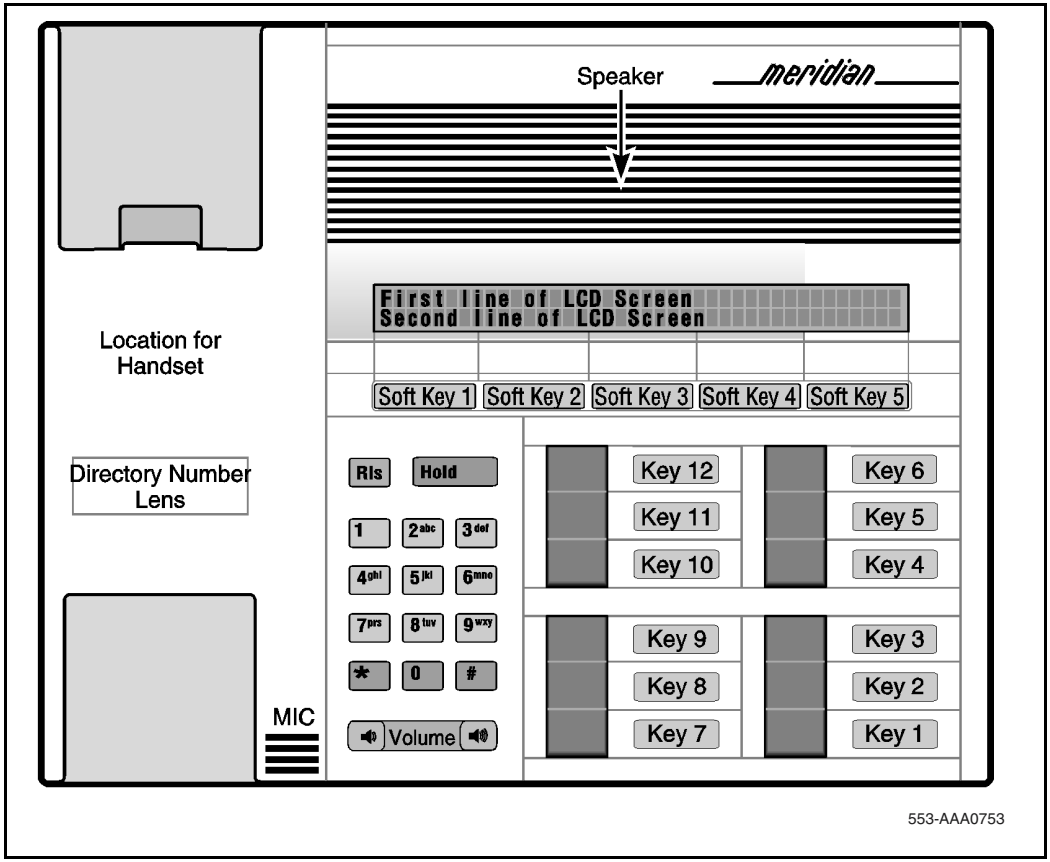

Automatic dial keys

In NI-1 and Meridian 1 modes, frequently-used numbers can be stored by programmable keys defined as local automatic dial keys. Any programmable function key that isn't programmed can be used as an automatic dial key.

Any number stored is retained, and the stored numbers are not affected by a power failure. The call to a stored directory number is made by pressing the programmed key.

LCD Indicators

All of the programmable function keys have liquid crystal display indicators beside them.

Table 71
Key status indicator

Indicator	Description
Off	Off
On	Off
Slow flashing	60 ipm*: 1/2 on, 1/2 off
Fast flashing	120 ipm*: 2/3 on, 1/3 off
* Impulses per minute	

Table 72
Normal DNs in all signaling modes

Indicator	Description
Off	Feature or line is not active
On	Feature or line is active
Slow flashing	Line is ringing
Fast flashing	Line is on hold or feature is being programmed
* Impulses per minute	

Table 73
Shared DNs

Indicator	Description
Slow flashing	Line is ringing
Fast flashing	On hold (retrieval allowed by other DN members)
Fast flashing	In “talking” state (bridging allowed by other DN members
On	In “talking” state (no bridging or retrieval allowed by other DN members)
On	Feature or line is active
* In MFT mode, “talking” state (no bridging or retrieval allowed by other DN members) the state is On.	

Table 74
Features (such as Speed Call)

Indicator	Description
Off	Feature or line is not active
On	Feature or line is active
Fast flashing	Feature is being programmed

Handsfree/Mute

A microphone and speaker are built in to permit Handsfree/Mute operation.

Data and headset option

An optional feature card (factory or field installed) permits the use of circuit and packet switched data by way of an RS-232C connector at the rear of the telephone, which allows connection of a personal computer (PC) terminal; the card also allows an appropriate headset to be used instead of the built-in Handsfree/Mute speakerphone. Field installation requires opening the telephone, which should only be done by an experienced installer. The data option serves as a DCE (Data Communications Equipment), using either a subset of the Hayes Smartmodem protocol or an X.25 PAD using X.3, X.28, X.29 protocols. The RS-232C data port may also be configured to provide control of the telephone for system test purposes.

Dial access

Any available dialed code access features may be used. Special screens or softkeys are not associated with them. The following are examples of dialed code access features:

- Directed Call Pickup
- Directed Call Park
- Authorization Code Entry
- Call Request

- Loudspeaker Paging
- Dictation Access and Control

Power

Power for the M5317T telephones is always supplied through the line cord. The telephones can be configured for either designated (continued service during local power failures) or non-designated (no service during local power failures) operation.

Power may be provided from PS1 or PS2 source output of NT1 interface, or can be provided locally from a sealed alternating current (AC) plug-in transformer with direct current (DC) output.

Servicing

Except for the insertion or removal of the data and headset option circuit board, as noted above, it is not necessary to open the telephone case for field servicing purposes. The telephone line cord and the handset cord are both equipped with TELADAPT connectors at both ends, permitting quick replacement where required. A hatch is provided for access to the dip switches to permit the selection of the appropriate power supply and of the “designated” telephone status.

Telephone programming

Service Profile Management

In NI-1 mode, information related to the programmable keys may be loaded into the M5317T memory from the Integrated Services Digital Line Card (ISDC) at the switch. This feature loading process will be performed on request. Currently, only DMS central offices support this service.

Accessibility of features depends on subscription at the switch, and softkeys for features not subscribed are removed from the display. Not all features need be provided in every case. Service change routines permit addition or deletion of features. If no feature loading takes place, the telephone must be configured manually. *Do not confuse this feature loading with the overall*

firmware downloading. The information is stored so that it is not lost when the power is removed.

In MFT mode, there is no equivalent process required because the protocol is much simpler. There is no such process for Meridian 1 mode because no optional features are provided.

Downloading

Firmware in the M5317TDX can be replaced by downloading from a server. This procedure is usually only required to customize the firmware, or to make additional features available.

BootROM operation

If downloading fails, or if the user selects it, control from the Main firmware is replaced by a simpler version called the Boot ROM firmware. This allows basic voice call operation until successful downloading is achieved.

Configuration mode

This feature is intended for installers and sophisticated users and is interlocked with power-on and a special key sequence. Some menus are:

- TEI assignment voice, circuit-switched data, and packet-switched X.25 data (no default, but retained if power lost). X.25 TEI can only be static; the others must be dynamic.
- Service Identifier Profile (SPID) assignment for voice and circuit-switched data, not required for packet-switching. (no default, but retained if power is lost.)
- DN assignment for circuit-switched and packet-switched data
- Test: analog and digital
- Selection of Codec coding law
- Selection of voice and circuit-switched data signaling protocol

Setup mode

Setup mode is intended for use by all M5317T digital telephone users. In NI-1 and Meridian 1 mode, press Setup to display the Setup menu. In MFT mode, press the center of the volume key to access Setup. The Setup menu includes:

- alerting tone style and cadence (NI-1 and Meridian 1 mode only)
- default volume for handset/headset, alerting tones, and speakerphone (NI-1 and Meridian 1 mode only)
- query features enabled and DNs (NI-1 and Meridian 1 mode only)
- Service Profile Management (SPM). Enter the four-digit password “5317” to display an SPM softkey.
- various data options (baud rate, parity, etc.)
- protocol version
- contrast adjustment
- language

Self test

During power-up, the M5317T tests many internal components and displays error codes if the test fails at any point. These codes are used in manufacturing testing only.

Error code displays

NI-1 and Meridian 1 modes only. (During startup, there are error codes in MFT too. During normal operation, there are no error codes on the idle display, but they can be accessed as described earlier for Setup mode.)

When errors are detected by the telephone, an error code replaces the normal date and time in the right-hand upper corner of the display.

Data LTID

For NI-1 and MFT mode, data LTID (Logical Terminal Identifier) must be BRAFS (Basic Rate Access: Functional Signaling). For MFT mode, you must set the bearer capability for the selected circuit. Voice may be BRAFS or

BRAMFT (Basic Rate Access: Meridian Feature Transparency), depending on features and service required.

Note: Basic Rate Access is now called Basic Rate Interface (BRI).

Local voice features

Local features are provided by the phone internally with minor intervention by the switch. They are purely local in nature, or they deal with the switch on the basis of dialed digits and ringing lines, and hold and release keys. The following are brief descriptions of local features provided by the M5317T.

Auto PDN select

NI-1 and Meridian 1 modes only. This feature automatically selects the Prime Directory Number (PDN) when the user goes off-hook, dials using the Saved Number feature, or uses certain other features such as Call Pickup or Call Park Retrieve, in the idle state. The user is prompted with Select free line if the PDN is not idle.

Autonumber

NI-1 and Meridian 1 mode only. This feature accepts a telephone number if an autonumber is assigned to any definable key that is not already defined as a call activator or a feature key. After the number is assigned, pressing the key causes the stored number to be dialed as if it came from the dial pad.

Note: In NI-1 mode, this feature may be used to program any number, such as a call forward number. If the telephone is idle and the PDN is not in use, then the PDN is automatically selected when the autoline key is pressed.

List incoming callers

NI-1 and Meridian 1 modes only. This feature provides the following functions:

- Records the origination address of all incoming calls to the PDN, along with the date and time of the call.

- Multiple calls from the same caller ID will show only once.
- Ten (10) entries are saved, in chronological order, with the oldest entry being removed to make room for a new entry when the list is filled to capacity.
- The user may dial directly from the list.
- The user may edit numbers in the list to make them suitable, before dialing (for example, adding a “9” prefix).

Handset muting

With this feature, the handset is muted when on-hook.

Handsfree/Mute (speakerphone or headset)

This feature provides microphone muting, controlled by definable keys. Handsfree and mute functions are defined differently for NI-1, MFT, and Succession 1000M, Succession 1000, and Meridian 1. Speakerphone, handset, and headset operations, are also provided. The speakerphone is automatically disabled when a headset is plugged into the Teladapt connector at the rear of the telephone.

The headset and handset may be used simultaneously. When the speakerphone is being used, going off-hook transfers the speech path to the handset. When the handset is being used, operating the Handsfree key switches the speech path to the speakerphone.

> ***Note:*** The Plantronics Supra (Model MH0530-1), ACS Ultralight with intra-concha earpiece (Model NWMP), and the Plantronics Starset (Model MH0230-1) are headsets which are compatible with either the M5317T telephone.

Volume

This feature provides independent adjustment for the speakerphone, alerting tones, and the headset and handset. Volume settings are retained during power failure.

Contrast

This feature provides display contrast adjustment. The setting is retained during power failure.

Predial

NI-1 and Meridian 1 modes only. This feature permits numbers to be entered and edited before selecting a line.

Number editing

NI-1 and Meridian 1 modes only. This feature permits the user, whenever applicable, to edit displayed numbers before completing an operation (for example, Call Forward programming).

Dual Tone Multifrequency (DTMF) generation

NI-1 and Meridian 1 modes only. This feature is provided whenever a B-channel is connected and used to control devices such as pagers and mechanized credit card systems. In MFT mode, DTMF is provided by the switch.

Local generation and cadencing of alerting tones

NI-1 and Meridian 1 modes only. This does not apply to MFT mode, because only the buzz is generated locally and the other tones are generated by the switch.

Call timers

NI-1 and Meridian 1 modes only. Call timers are provided as follows:

- There is one timer for each call appearance, including non-directory number (DN) call appearances.
- Timers run when associated call appearances are connected or held.
- Timers may be manually reset by the user.

- Timers start automatically after 10 seconds if a call-connect message is not received (non-ISDN or off-net calls).
- Timers start (or reset) when the called number answers.

Date and time-of-day clock

NI-1 and Meridian 1 modes only. This feature displays the time in 12-hour format. If power fails, the date and time must be reset.

Data transmission

The M5317T telephones support PCM voice on either B-channel. Circuit-switched data calls on the M5317TDX may be made using the other B-channel. The NT T-link or standard V.120 protocols are used to convert the serial data from the RS-232C port to the 64 Kbit/sec stream (rate adaption) for transmission on the B-channel.

The M5317TDX Data Option is logically separate from voice calls. The Hayes protocol is used to control circuit-switched data calls, and X.25 packet-switched calls on D-channel are supported with X.3, X.28, X.29 control protocol.

Digital telephones line engineering

Contents

This section contains information on the following topics:

Engineering a telephone line

Use Procedure 62 on page 494 to engineer a digital telephone line.

Procedure 62
Engineering a telephone line

1 Be sure that cable pair selections meet the following requirements:

- AC signal loss is less than 12 dB at 256 kHz due to all sources.
- DC loop resistance is less than 175 ohm.
- Minimum loop length (mainframe bulkhead to telephone) is 30 m (100 ft).
- Near-end crosstalk coupling loss is >38 dB at Nyquist frequency of 256 kHz (not an issue for typical 22, 24, and 26 AWG twisted pair cable).
- No bridge taps are permitted.
- No loading coils are permitted.
- Protection devices of the carbon-block and gas-filled type are permitted if the off-state shunting impedance is better than 10 M¾ resistive and less than 0.5 pF capacitive.

2 Be sure that the following criteria are met where under-carpet cabling is used:

- Characteristic impedance is at 256 kHz, 100 ± 10 ohm.
- Insertion loss is at 256 kHz, <4.6 dB/kft.
- The next pair-to-pair coupling loss is at 256 kHz, >40 dB.

3 For a typical system with 22, 24, or 26 AWG standard twisted-pair cable, the requirements translate to the following allowable loops:

- up to 915 m (3000 ft) of 22 or 24 AWG cable
- up to 640 m (2100 ft) of 26 AWG cable

4 If the selected cable pair does not work satisfactorily, select another cable pair as shown in Figure 121.

End of Procedure

Figure 121
Engineer a telephone line (Part 1 of 8)

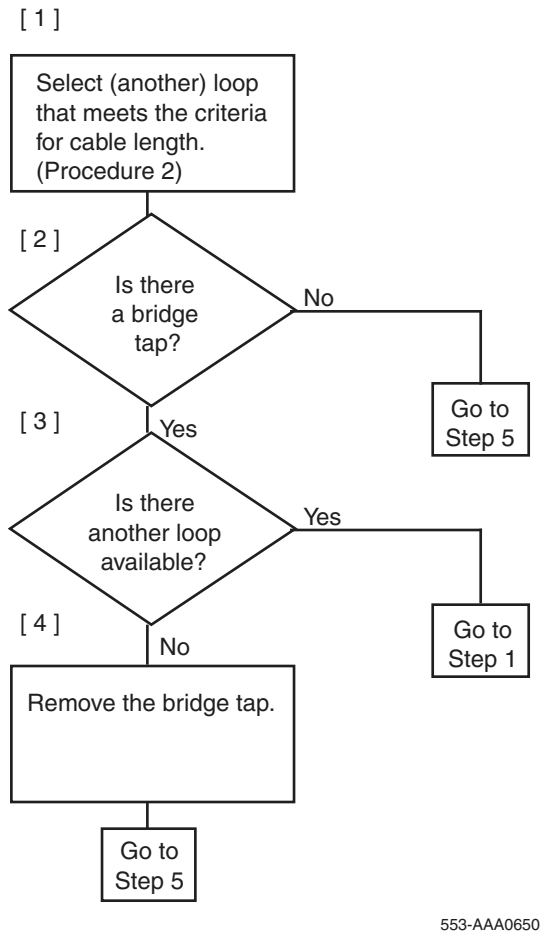

Figure 121
Engineer a telephone line (Part 2 of 8)

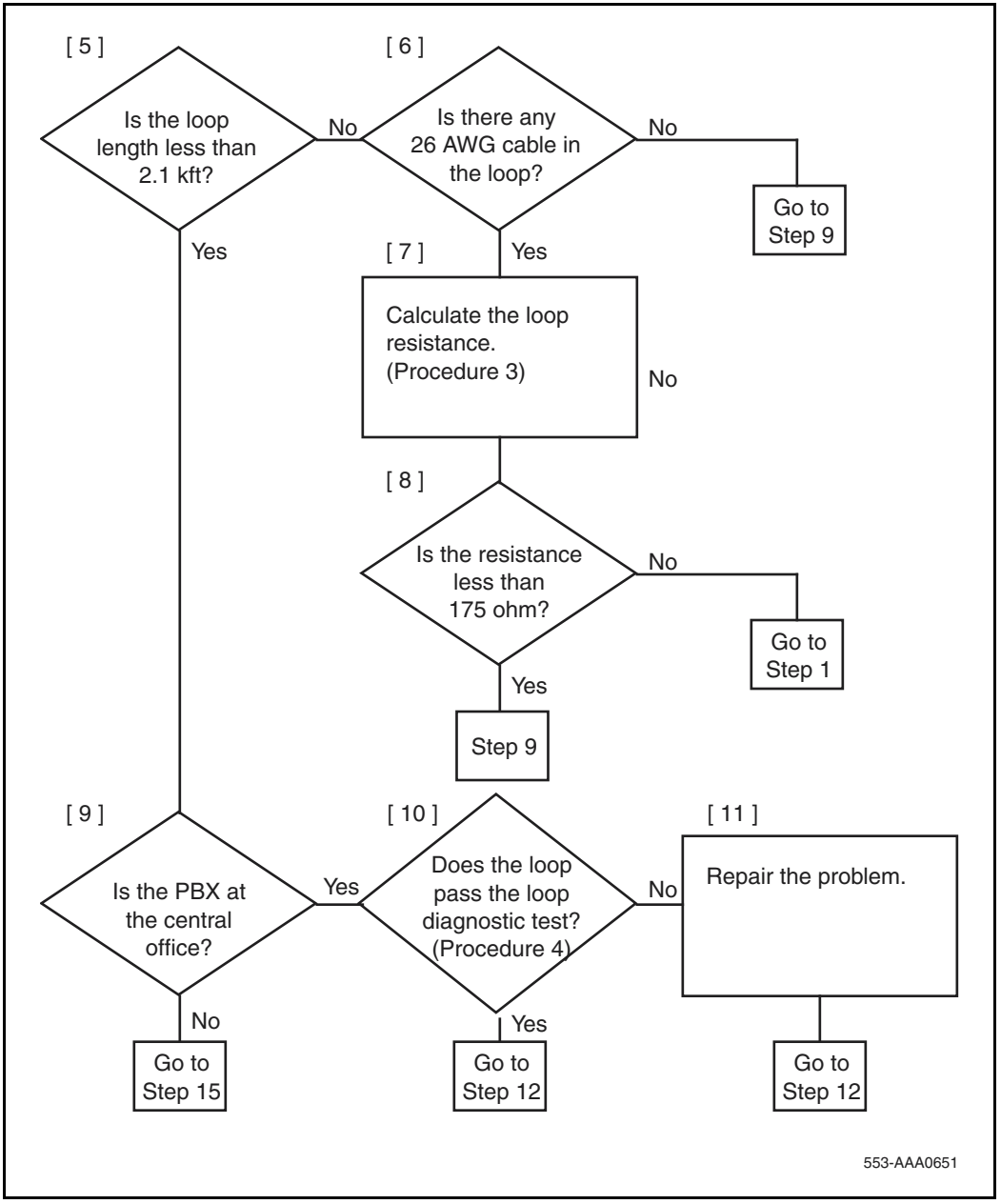

Figure 121
Engineer a telephone line (Part 3 of 8)

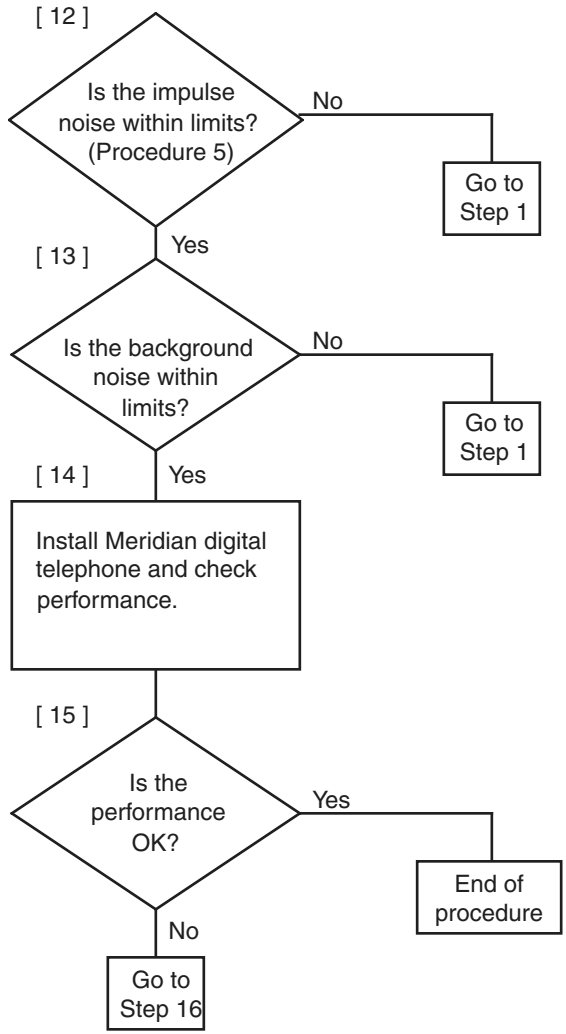

Figure 121
Engineer a telephone line (Part 4 of 8)

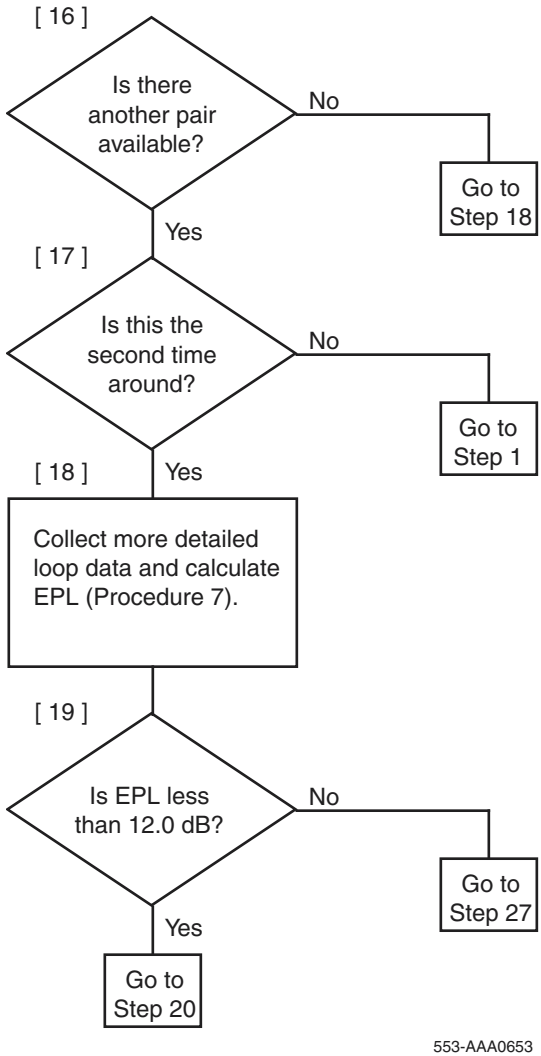

Figure 121
Engineer a telephone line (Part 5 of 8)

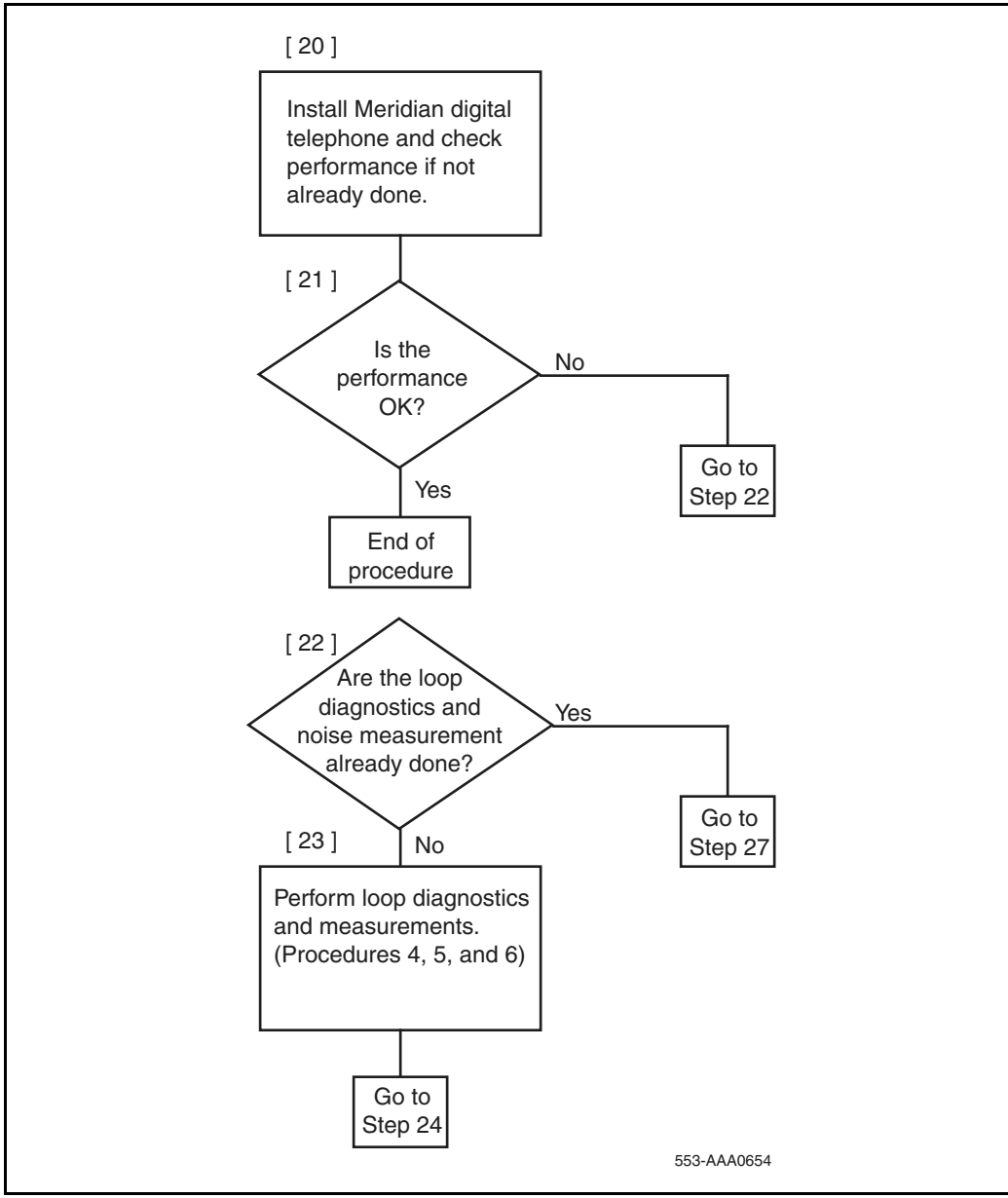

Figure 121
Engineer a telephone line (Part 6 of 8)

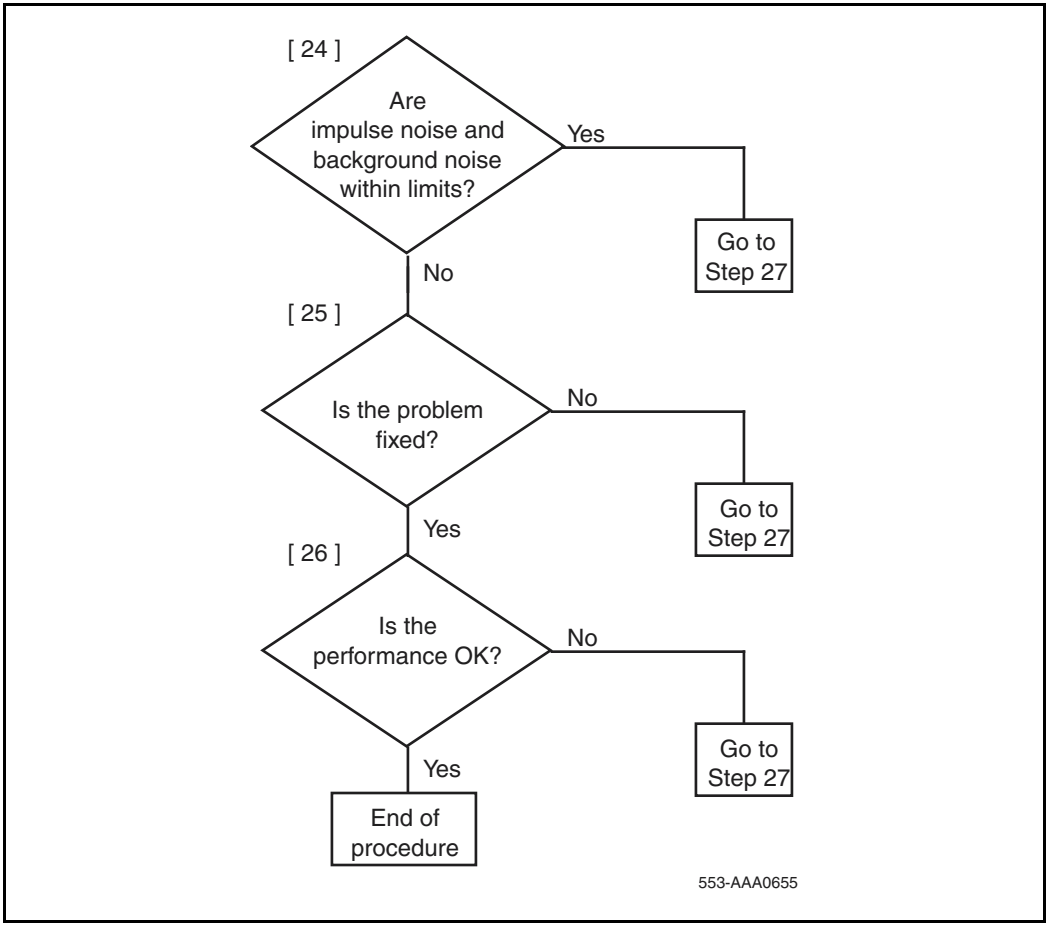

Figure 121
Engineer a telephone line (Part 7 of 8)

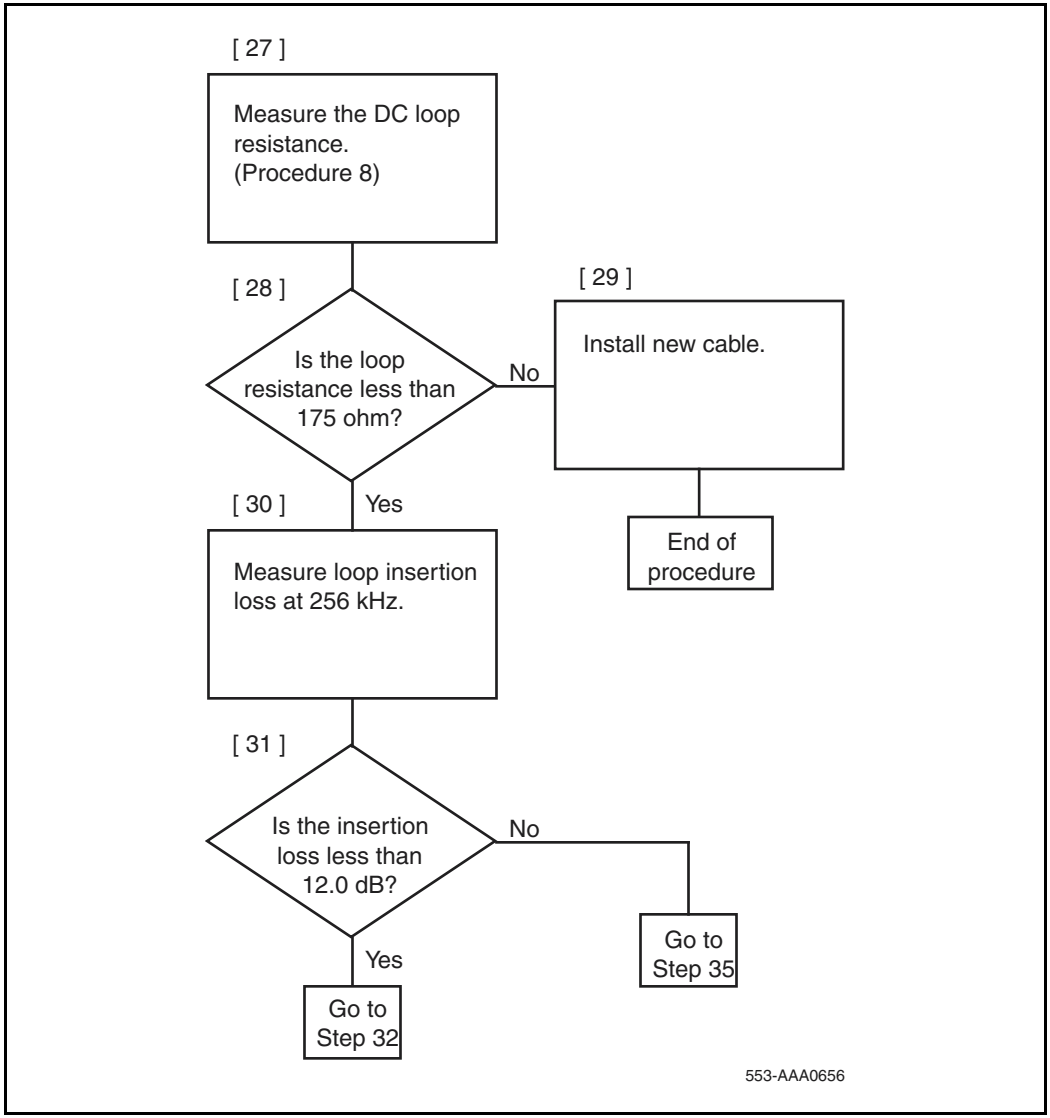

Figure 121
Engineer a telephone line (Part 8 of 8)

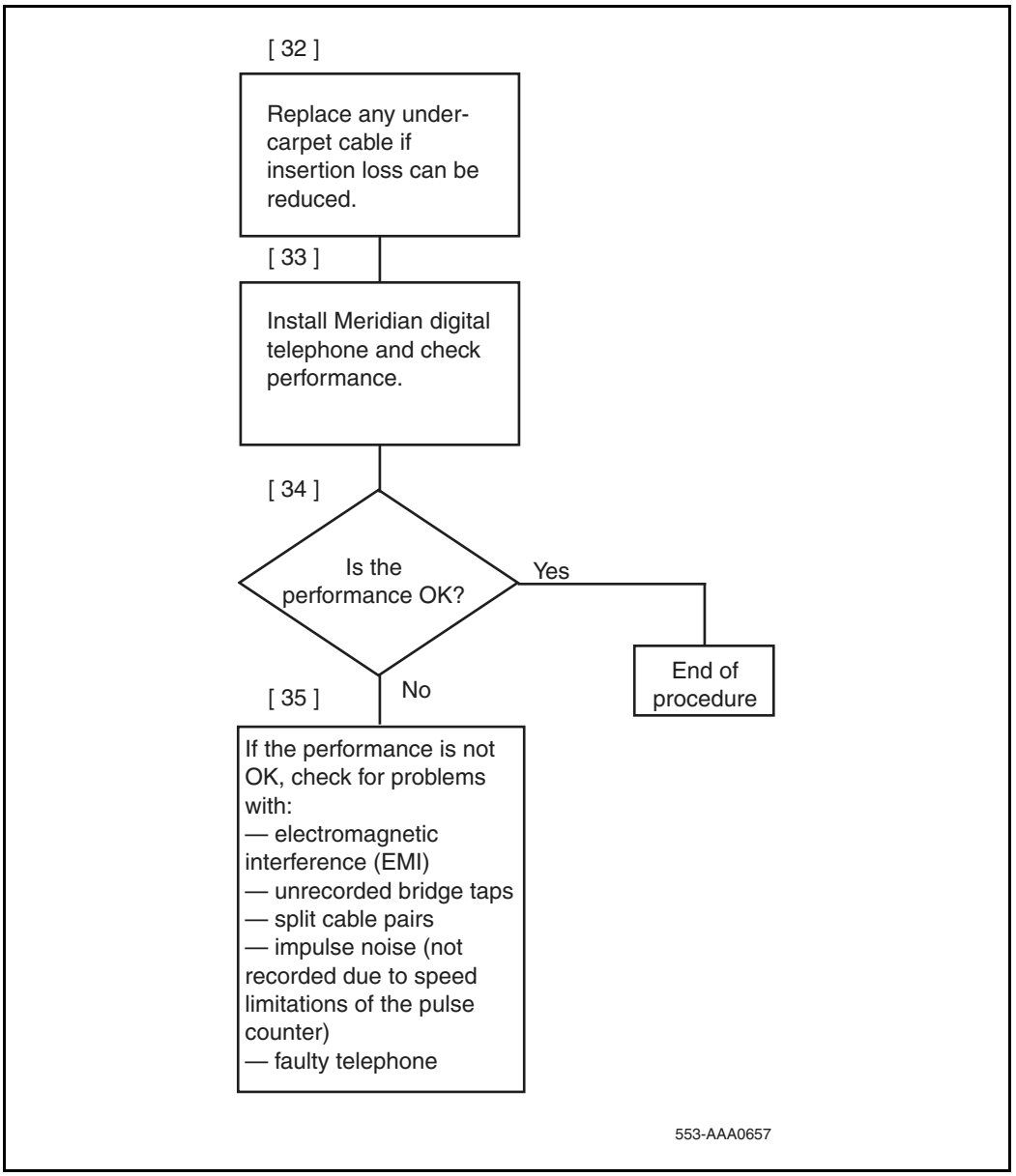

Selecting a Loop

For a Meridian digital telephone, the loop must be without bridge taps, less than 175 ohm DC resistance, and less than 12.0 dB loss at 256 kHz. For single-gauge 22 and 24 AWG cable, and D inside wiring, the length limit is 914.4 m (3000 ft). For single-gauge 26 AWG cable, the length limit is 640.08 m (2100 ft).

The allowable loop length assumes there is no under-carpet cable. If there is under-carpet cable that is a different type than Western Electric (WE) 4-pair cable, reduce the allowable loop length by using the following equation:

$$LM = [12 - (UC \times UL)] / LL$$

where:

LM = loop length limit in km (kft) (excluding the length of the under-carpet cable)

LL = loop loss in dB/km (dB/kft) at 256 kHz

UC = length of the under-carpet cable in km (kft)

UL = loss of the under-carpet cable in dB/km (dB/kft) at 256 kHz (see Table 77 on page 512 for dB values)

Calculating DC Loop Resistance

Use Procedure 63 to calculate the DC loop resistance.

Procedure 63
Calculating DC loop resistance

1. Calculate the DC loop resistance by adding the resistance of each cable section. Calculate the resistance of each cable section by using the following formula (cable resistances are given in Table 75 on page 504):

   $$LRi = CRi \times SLi$$

   where:

   LRi = DC resistance for cable section *i*

   CRi = conductor resistance per unit length for the cable section *i*

   SLi = length of cable section *i*

2 Add the total of all cable sections. If the total of all sections exceeds 175 ohm, select another loop.

Note: The loop resistance limit of 175 ohm must be reduced by 1 ohm for each percent of the loop that is aerial cable (see Table 75 on page 504).

Table 75
Conductor resistance per unit

Gauge	Ohm per loop kft	Ohm per loop km
26	83	278
24	52	173
22	33	109
19	16	54

Performing Loop Diagnostic Tests

The following equipment is required for the loop diagnostic tests in Procedure 64 on page 504:

- one volt-ohmmeter (VOM) for each test
- one 77 cable analyzer or equivalent for each test

Procedure 64
Testing foreign voltage

1 Set the VOM range switch to a scale 60 V dc/V ac or greater.

2 Connect the VOM test probes to the loop at the line card or distributing frame.

3 Measure the DC and AC voltage between the following points under no-load conditions:

- tip (T) and ring (R)
- T and ground (GND)
- R and GND

Requirement: Voltage readings should be less than 1 V dc/V ac.

Procedure 65
Testing insulation resistance

1. Set the VOM range switch to ohm x 10,000 and adjust the meter to zero.
2. Connect the VOM test probes to the loop at the line card or distribution frame.

3 Measure the resistance between the following points under no-load conditions:

- T and R
- T and GND
- R and GND

Requirement: Resistance readings must be greater than 10 M ohm.

Procedure 66
Testing DC continuity

1 Short circuit the T and R at the far end.

2 Using the VOM, measure the resistance between the T and R.

Requirement: Resistance measurement should be approximately equal to the calculated loop resistance as described in Procedure 63 on page 503.

Procedure 67
Testing capacitance unbalance

1 Using the cable analyzer, measure the capacitance between the following points:

- T and GND
- R and GND

Requirement: The difference between the two readings must be <0.002 µF>.

Measuring Impulse Noise

Use Procedure 68 on page 506 to measure impulse noise.

Procedure 68
Measuring impulse noise

1 Measure impulse noise on selected lines during busy hours. Use an NE–58B noise measurement set or the equivalent.

Note: The termination and weighting filter required are 135 ohm and 100 kHz, respectively, and the blanking interval is 25 µs.

2 Using Figure 122, determine that for a given loop loss and noise threshold the impulse noise counts for each 15-minute interval are below the corresponding curve.

Note 1: The values in Figure 122 were derived by assuming that the counter has a count rate or 512 pulses per second.

Note 2: Because of the inaccuracy of the noise-measuring set, additional errors can occur during the blanking interval, and the reading consequently is lower than the actual measurement.

Measuring Background Noise

Use Procedure 69 on page 507 to measure background noise.

Procedure 69

1 Measure background noise on the loop by using an NE-58B noise-measuring set.

Note: The weighting and termination to be used are 100 kHz flat and 135 ohm, respectively.

2 Reject the loop being tested if the measured background noise is not less than 51 dBrn.

Calculating Expected Pulse Loss

Use Procedure 70 on page 507 to calculate expected pulse loss.

Procedure 70
Calculating expected pulse loss

1 Collect loop makeup data between the line card and the terminal. For each cable section, the data required is:

- cable type (PIC or pulp)
- gauge
- length
- type of plant construction (underground, aerial, or in-building)

Figure 122
Maximum allowable impulse noise counts versus loop loss

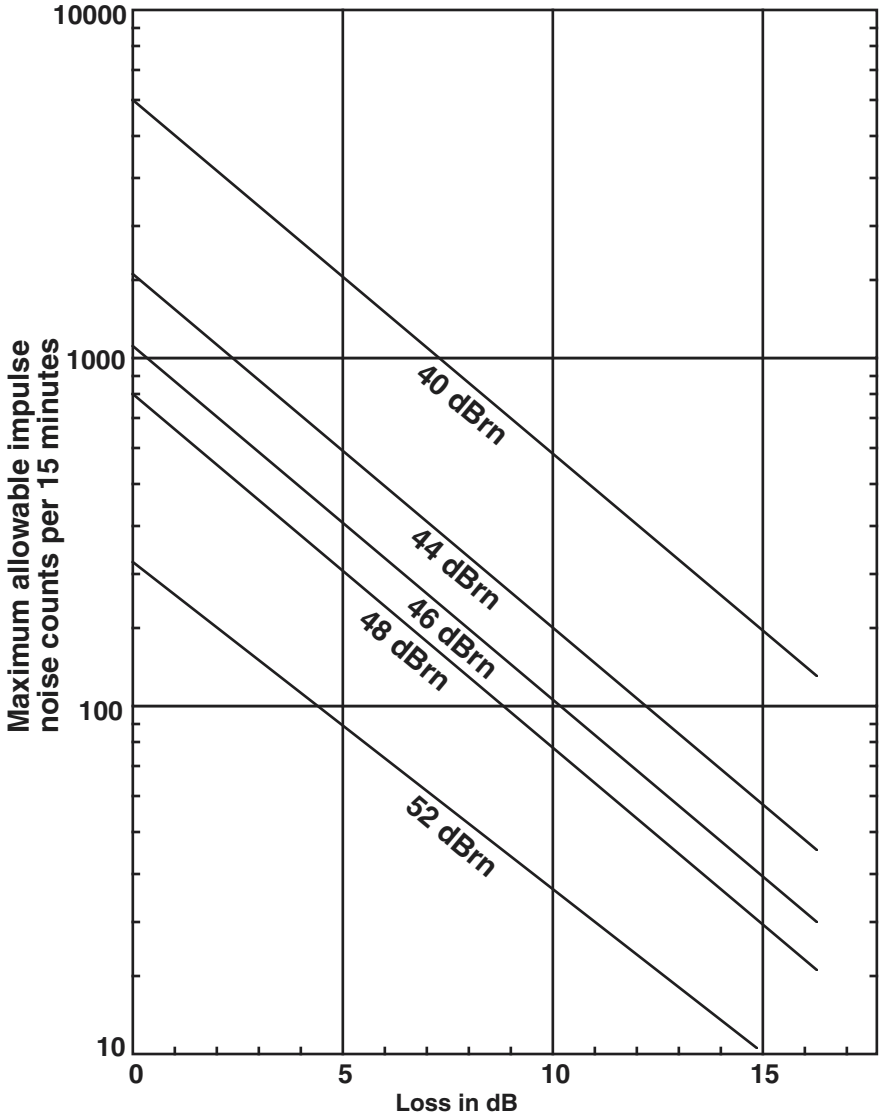

Note: **Impulse noise counter weighting is 100 kHz. Termination is 135 ohms.**

553-AAA0658

2 Calculate individual cable section losses by using the figures in Table 76 on page 511 through Table 78 on page 512, and the following equation:

CSLi = SLi x Li

- CSLi = cable section loss for section *i*
- SLi = section length of section *i*
- Li = loss per unit length for section *i*

3 Correct individual cable section losses for maximum cable temperature by using the following equation:

TCLi = CSLi x TCFi

- TCLi = temperature corrected loss for section *i*
- TCFi = temperature correction factor for section *i*

Correction factors:

- aerial cable TCF = 1.1
- underground cable TCF = 1.04
- in-building cable TCF = 1

4 Determine junction loss (see Figure 123).

Note: Junction loss due to gauge discontinuity of outside plant cables and D inside wire varies between 0.03 dB and 0.07 dB and can be ignored. However, AMP 25-pair under-carpet wiring has a characteristic impedance of 40 ohm at 256 kHz, and its junction loss is approximately 2 dB. This must be included in the calculation.

5 Calculate the expected pulse loss (EPL) by finding the sum of the items.

6 Reject loops whose expected pulse loss is greater than 12 dB.

Example of applying Procedure 70

Section 1:
Mainframe bulkhead to DF1 - 500m, 26 AWG PIC, underground

Section 2:
DF1 to DF2 - 200m, 26 AWG PIC, inside

Section 3:
DF2 to terminal - 24 AWG NT D-inside

Therefore:
SL1 = 1.5 km, SL2 = 0.2 km, SL3 = 0.1 km

From Table 76 on page 511 and Table 77 on page 512:

L1 = 13.7 dB/km, L2 = 13.7 dB/km, L3 = 13.3 dB/km.

Using the equation in Step 2, we arrive at the following:
CSL1 = 6.85 dB, CSL2 = 2.74 dB, and CSL3 = 1.33 dB

Temperature corrections:
Using correction factors of TCF1 = 1.04, and TCF2 and TCF3 = 1, and using the equation in Step 3 results in TCL1 = 7.12 dB, TLC2 = 2.74 dB, and TCL3 = 1.33 dB.

Expected pulse loss (EPL) value:
Neglecting any junction loss (see the note in Step 4), Step 5 results in an EPL value of TSL1 + TSL2 + TSL3 + 0 = 11.19 dB.

This is under the 12 dB limit and meets the criteria.

Table 76
Cable attenuation at 256 kHz and 21.1 degrees C (70 degrees F)

Cable type	26 AWG		24 AWG		22 AWG		19 AWG	
	dB/kft	dB/km	dB/kft	dB/km	dB/kft	dB/km	dB/kft	dB/km
PIC	4.2	13.7	3.1	10.2	2.5	8.1	1.7	5.6
Pulp	4.3	14.3	3.5	11.4	2.7	9.0	2.0	6.6

Table 77
Attenuation at 256 kHz for U/C cable

WE 4-pair		AMP 25-pair	
dB/kft	dB/km	dB/kft	dB/km
4.6	15.3	19.0	63.3

Table 78
Attenuation at 256 kHz for D inside wiring cable

NT		WE		Superior		General	
dB/kft	dB/km	dB/kft	dB/km	dB/kft	dB/km	dB/kft	dB/km
4.0	13.3	3.2	10.7	3.7	13.3	4.6	15.3

Measuring DC Loop Resistance

Measure DC loop resistance by using standard procedures.

Note: The DC loop resistance limit of 175 ohm should be reduced by 1 ohm for each one percent of the total loop that is aerial cable.

Figure 123
Junction loss versus cable characteristic impedance

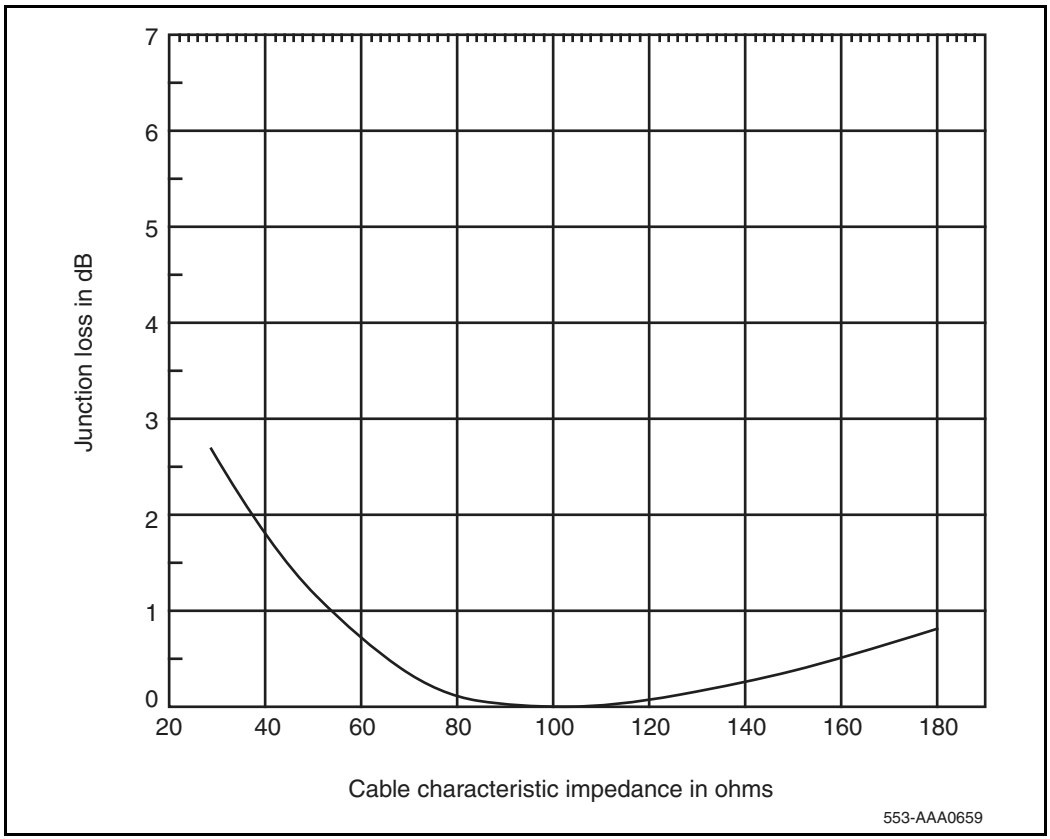

List of terms

ACD

Automatic Call Distribution

ACM

Accessory Connection Module

ADO

Asynchronous Data Option

ATA

Analogue Terminal Adapter

CCOS

Controlled Class of Service

COS

Class of Service

CPM

Call Progress Monitor

CPND

Calling Party Name Display

CTIA

Computer Telephony Integrated Adapter

DBA

Display-Based Accessory (Configuration prompt for Display-based Expansion Module)

DCE

Data Communications Equipment

DLC

Digital Line Card

DN

Directory Number

DSIC

Digital Set Interface Chip

DTE

Data Terminal Equipment

EIA

Electronic Industries Association

FCC

Federal Communications Commission

FDHF

Full Duplex Handsfree

FFC

Flexible Feature Code

IDF

Intermediate Distribution Frame

ISDLC

Integrated Services Digital Line Card

KBA

Key-Based Accessory (Configuration prompt for Key-based Expansion Module)

LCD

Liquid Crystal Display

LED

Light Emitting Diode (lamp)

MCA

Meridian Communications Adapter

MDF

Main Distribution Frame

MPDA

Meridian Programmable Data Adapter

MSB

Make Set Busy

MWI

Message Wait Indicator

PCM

Pulse Code Modulation

SCPL

Station Controlled Password Length

SCPW

Station Controlled Password, part of station configuration

TN

Terminal Number

VOT

Virtual Office Terminal

Index

Numerics

A

B

C

D

E

J

K

L

M

N

O

P

Q

R

S

T

U

V

W

Z

Meridian 1, Succession 1000,
Succession 1000M

Telephones and Consoles

Description

Information is subject to change without notice. Nortel Networks reserves the right to make changes in design or components as progress in engineering and manufacturing may warrant. This equipment has been tested and found to comply with the limits for a Class A digital device pursuant to Part 15 of the FCC rules, and the radio interference regulations of Industry Canada. These limits are designed to provide reasonable protection against harmful interference when the equipment is operated in a commercial environment. This equipment generates, uses and can radiate radio frequency energy, and if not installed and used in accordance with the instruction manual, may cause harmful interference to radio communications. Operation of this equipment in a residential area is likely to cause harmful interference in which case the user will be required to correct the interference at their own expense.

Publication number: 553-3001-367
Document release: Standard 1.00
Date: October 2003
Produced in Canada

NORTEL NETWORKS™